www.xinxunwei.com 400-800-9990

1. ALL RESISTANCE VALUES ARE IN OHMS, 0.1 WATT +/- 5%.
2. ALL CAPACITANCE VALUES ARE IN MICROFARADS.
3. ALL CRYSTALS & OSCILLATOR VALUES ARE IN HERTZ.

REV	ECN	DESCRIPTION OF REVISION	CK APPD / DATE
10	0008927012	ENGINEERING RELEASED	2017-06-06

D21 MLB - DVT (0K2FAB)

版本

LAST_MODIFICATION=Tue Jun 6 18:57:04 2017

页面 PAGE	CSA	内容 CONTENTS	SYNC	DATE
1	1	TABLE OF CONTENTS	sync	06/19/2016
2	2	SYSTEM: BOM TABLES (1/2)	sync	02/24/2017
3	3	SYSTEM: BOM TABLES (2/2)	test_mlb	03/17/2017
4	4	SYSTEM:MECH COMPONENTS	sync	04/14/2017
5	5	SYSTEM: Testpoints 测试点	sync	04/14/2017
6	6	BOOTSTRAPPING 主板版本配置	sync	09/19/2016
7	10	SOC: JTAG,USB,XTAL CPU的JTAG模块、USB模块、时钟电路	sync	04/14/2017
8	11	SOC: PCIE CPU的PCIE模块	sync	04/14/2017
9	12	SOC: MIPI + ISP CPU的MIPI总线(显示和前相头）和ISP_I2C总线	sync	04/14/2017
10	13	SOC: LPDP CPU的LPDP总线（后相头）	sync	04/14/2017
11	14	SOC: SERIAL + SMC CPU的串行总线（I2C总线）	sync	04/14/2017
12	15	SOC: GPIO + UART CPU可编程引起+UART总线	sync	04/14/2017
13	16	SOC: AOP **CPU内部集成的传感器模块（(协处理器)）**	sync	04/14/2017
14	17	SOC: Power (1/3) CPU的供电	sync	04/14/2017
15	18	SOC: Power (2/3) CPU的供电	sync	04/14/2017
16	19	SOC: Power (3/3) CPU的供电	sync	04/14/2017
17	26	NAND 硬盘	sync	04/14/2017
18	27	SYSTEM POWER: PMU Bucks (1/4) 电源芯片的PWM供电输出	sync	04/14/2017
19	28	SYSTEM POWER: PMU Bucks (2/4) 电源芯片的PWM供电输出	sync	04/14/2017
20	29	SYSTEM POWER: PMU LDOs (3/4) 电源芯片的线性供电输出	sync	04/14/2017
21	30	SYSTEM POWER: PMU (4/4) 电源芯片的控制信号部分	sync	04/14/2017
22	31	SYSTEM POWER: Boost PP_VDD_BOOST “产生电路	sync	04/14/2017
23	32	SYSTEM POWER: B2B Battery 电池接口	sync	04/14/2017
24	33	SYSTEM POWER: Charger 充电芯片	sync	04/14/2017
25	34	SYSTEM POWER: Iktara 无线充电芯片	sync	04/14/2017
26	35	SYSTEM POWER: B2B Cyclone 无线充电接收电路	sync	04/14/2017
27	36	SENSORS 传感器	sync	04/14/2017
28	37	CAMERA: PMU (1/2) 摄像头的供电芯片	sync	04/14/2017
29	38	CAMERA: PMU (2/2) 摄像头的供电芯片	sync	04/14/2017
30	39	CAMERA: B2B Wide (KY) 后置摄像头接口（广 角相头）	sync	04/14/2017
31	40	CAMERA: B2B Tele (TN) 后置摄像头接口（长焦相头）	sync	04/14/2017
32	41	CAMERA: Strobe Drivers 闪光灯驱动芯片	sync	04/14/2017
33	42	CAMERA: FCAM + FOREHEAD 前置摄像头，听筒，感光感距等	sync	04/14/2017
34	43	CAMERA: B2B Strobe + Buttons 闪光灯接口、按键、麦克风	sync	04/14/2017
35	47	AUDIO: CODEC (1/2) 大音频	sync	04/14/2017
36	48	AUDIO: CODEC (2/2) 大音频	sync	04/14/2017
37	49	AUDIO: Speaker Amp Bottom 小音频(铃声功放）	sync	04/14/2017
38	50	AUDIO: Speaker Amp Top 小音频（听筒功放）	sync	04/14/2017
39	51	ARC: Driver 振动芯片	sync	04/14/2017
40	55	CG: Niki M5500复合电感（充电升压电感、铃声功放升压、背光升压电感等模块）	sync	04/14/2017
41	56	CG: PMUs 显示触摸供电芯片、背光供电芯片、指纹升压芯片	sync	04/14/2017
42	57	CG: B2B DISPLAY + TOUCH 显示触摸连接座	sync	04/14/2017
43	58	CG: B2B ORB + MESA 返回触感和指纹连接座	sync	04/14/2017
44	59	I/O: Overvoltage Cut-Off Circuit 电池过充保护芯片	sync	04/14/2017
45	61	I/O: Accessory Buck 附件供电ACC3.3V供电芯片	sync	04/14/2017
46	62	I/O: USB PD 快充芯片	sync	04/14/2017
47	63	I/O: Hydra USB芯片	sync	04/14/2017
48	64	I/O: B2B DOCK 尾插接口	sync	10/10/2016
49	65	SYSTEM: I2C MAP I2C总线列表	sync	04/14/2017
50	80	RADIOS AP电路到基带电路信号名称转换列表	D21_MLB_DOE	07/18/2016
51	1	page1		
52	75	NFC NFC近场通讯		
53	1	FRONT PAGE 基带部分主页		
54	2	HIERARCHY		
55	3	PMIC: BUCKS & LDOS 基带电源输出		
56	4	PMIC: CLOCKS & CONTROL 基带电源的时钟和控制信号		
57	5	BB: POWER 基带CPU供电		
58	6	BB: CONTROL & HS PERIPHERALS [6] 基带芯片+		
59	7	BB: GPIOS & QLINK 基带芯片		
60	8	XCVR 射频		
61	9	XCVR 射频		
62	10	QPOET MODULE 功放电源		
63	11	LB PAD 低频功放		
64	12	HB PAD 高频功放		
65	13	UHB PAD 超高频功放		
66	14	2G PA 2G功放		
67	15	LB DSM 低频分集接收器		
68	16	HB DSM 高频分集接收器		
69	17	COUPLER2 耦合器		
70	18	LOWER ANTENNA 天线		
71	19	UPPER ANTENNA 天线		
72	20	GNSS GPS		
73	21	SIM, DEBUG CONN SIM卡，诊断接口		
74	22	TEST POINTS 测试点	PROBE POINTS	07/18/2016
75	1	FRONT PAGE		
76	2	METROCIRC		
77	3	UAT MATCH AND TUNER		
78	4	RFFE TO GPO TRANSLATOR		
79	1	SymbolPorts		
80	4	Guinness WIFI、蓝牙	WIFI	11/28/2016
81	5	WiFiANTFeeds WIFI天线		11/28/2016

PART#	QTY	DESCRIPTION	REFERENCE DESIGNATOR(S)	BOM OPTION
051-02159	1	SCH,MLB,D21	SCH	?
820-00846	1	PCBF,MLB,D21	PCB	?

Sub Designs

SOURCE PROJECT	SUB-DESIGN NAME	VERSION	HARD/SOFT	SYNC_DATE/TIME
D21	RADIO_MLB	0.122.0	S	2017_06_06_17:14:31
D20	NFC_MLB	0.50.0	S	2017_05_26_07:54:42
D21	WIFI_MLB	0.20.0	S	2017_05_16_02:56:32
D21	RADIO_MLB_FF	0.35.0	S	2017_06_02_14:56:02

www.xinxunwei.com 400-800-9990

EEEE Codes

PART#	QTY	DESCRIPTION	REFERENCE DESIGNATOR(S)	CRITICAL	BOM OPTION	
825-7691	1	EEEE FOR (MLB,639-04441,JP,ULTRA)	EEEE_J08R	CRITICAL	EEEE_ULTIMATE	D21x Specific
825-7691	1	EEEE FOR (MLB,639-03377,JP,EXTREME)	EEEE_HNV8	CRITICAL	EEEE_EXTREME	D21x Specific
825-7691	1	EEEE FOR (MLB,639-04442,ROW,ULTRA)	EEEE_J08X	CRITICAL	EEEE_ULTIMATE_ROW	D21x Specific
825-7691	1	EEEE FOR (MLB,639-03380,ROW,EXTREME)	EEEE_HNVF	CRITICAL	EEEE_EXTREME_ROW	D21x Specific

SOC

PART#	QTY	DESCRIPTION	REFERENCE DESIGNATOR(S)	CRITICAL	BOM OPTION	
339S00416	1	SoC,H,3GB 21nm DDR,B1	U1000	CRITICAL	COMMON	D21x Specific

PART NUMBER	ALTERNATE FOR PART NUMBER	BOM OPTION	REF DES	COMMENTS:
339S00415	339S00416	BOM_TABLE_ALTS	U1000	SoC,M,3GB 20nm DDR,B1
339S00417	339S00416	BOM_TABLE_ALTS	U1000	SoC,S,3GB 20nm DDR,B1
339S00418	339S00416	BOM_TABLE_ALTS	U1000	SoC,S,3GB 1xnm DDR,B1
339S00429	339S00416	BOM_TABLE_ALTS	U1000	SoC,H,3GB 20nm DDR,B1
339S00430	339S00416	BOM_TABLE_ALTS	U1000	SoC,M,3GB 20nm DDR,B1
339S00431	339S00416	BOM_TABLE_ALTS	U1000	SoC,S,3GB 20nm DDR,B1
339S00432	339S00416	BOM_TABLE_ALTS	U1000	SoC,S,3GB 18nm DDR,B1

SIPs

PART NUMBER	ALTERNATE FOR PART NUMBER	BOM OPTION	REF DES	COMMENTS:	
339M00011	339M00010	BOM_TABLE_ALTS	M5500	NIKI, STATS SIP	D21x Specific
339M00013	339M00012	BOM_TABLE_ALTS	M4100	HUNT, STATS SIP	

SOFT-TERM CAP SUB BOMS

PART NUMBER	ALTERNATE FOR PART NUMBER	BOM OPTION	REF DES	COMMENTS:	
685-00152	685-00151	BOM_TABLE_ALTS	SUBBOM_CAP	SUBBOM,MLB,CAP,SOFT,D21	
138S00049	138S0831	TYPICAL_CAP	ALL	CAP,0201,2.2UF,6.3V,KYOCERA	To enable alt in SUBBOM

	PART#	QTY	DESCRIPTION	REFERENCE DESIGNATOR(S)	CRITICAL	BOM OPTION	
	685-00151	1	SUBBOM,MLB,SOFT-TERM,D21	SUBBOM_CAP			Default is typical
AGNES OUTPUT	138S00159	9	CAP,SOFT-TERM,2.2uF,6.3V,0201,KYOCERA	C2906,C2961,C2963,C2966,C2967,C2910-C2913		SOFT_CAP	
	138S0831	9	CAP,TYPICAL,2.2UF,6.3V,0201,MURATA	C2906,C2961,C2963,C2966,C2967,C2910-C2913		TYPICAL_CAP	
AGNES INPUT	138S00159	15	CAP,SOFT-TERM,2.2uF,6.3V,0201,KYOCERA	C2851-C2852,C2854-C2860,C2862-C2866,C2868		SOFT_CAP	
	138S0831	15	CAP,TYPICAL,2.2UF,6.3V,0201,MURATA	C2851-C2852,C2854-C2860,C2862-C2866,C2868		TYPICAL_CAP	
	138S00159	10	CAP,SOFT-TERM,2.2uF,6.3V,0201,KYOCERA	C2970-C2972,C2974-C2976,C2979,C2971,C2980,C2981		SOFT_CAP	
	138S0831	10	CAP,TYPICAL,2.2UF,6.3V,0201,MURATA	C2970-C2972,C2974-C2976,C2979,C2971,C2980,C2981		TYPICAL_CAP	
T2	138S00159	2	CAP,SOFT-TERM,2.2uF,6.3V,0201,KYOCERA	C3351,C3352		SOFT_CAP	
	138S0831	2	CAP,TYPICAL,2.2UF,6.3V,0201,MURATA	C3351,C3352		TYPICAL_CAP	
SENSORS	138S00159	3	CAP,SOFT-TERM,2.2uF,6.3V,0201,KYOCERA	C3602,C3611,C3622		SOFT_CAP	
	138S0831	3	CAP,TYPICAL,2.2UF,6.3V,0201,MURATA	C3602,C3611,C3622		TYPICAL_CAP	
ANGEL INPUT	138S00159	5	CAP,SOFT-TERM,2.2uF,6.3V,0201,KYOCERA	C3791,C3795-C3798		SOFT_CAP	
	138S0831	5	CAP,TYPICAL,2.2UF,6.3V,0201,MURATA	C3791,C3795-C3798		TYPICAL_CAP	
RCAM B2Bs	138S00159	3	CAP,SOFT-TERM,2.2uF,6.3V,0201,KYOCERA	C3909,C3925,C3926		SOFT_CAP	
	138S0831	3	CAP,TYPICAL,2.2UF,6.3V,0201,MURATA	C3909,C3925,C3926		TYPICAL_CAP	
FOREHEAD B2Bs	138S00159	2	CAP,SOFT-TERM,2.2uF,6.3V,0201,KYOCERA	C4250,C4261		SOFT_CAP	
	138S0831	2	CAP,TYPICAL,2.2UF,6.3V,0201,MURATA	C4250,C4261		TYPICAL_CAP	
STROBE B2Bs	138S00159	1	CAP,SOFT-TERM,2.2uF,6.3V,0201,KYOCERA	C4303		SOFT_CAP	
	138S0831	1	CAP,TYPICAL,2.2UF,6.3V,0201,MURATA	C4303		TYPICAL_CAP	
AUDIO	138S00159	5	CAP,SOFT-TERM,2.2uF,6.3V,0201,KYOCERA	C4805,C4809,C4914,C4926,C4929		SOFT_CAP	
	138S0831	5	CAP,TYPICAL,2.2UF,6.3V,0201,MURATA	C4805,C4809,C4914,C4926,C4929		TYPICAL_CAP	
	138S00159	5	CAP,SOFT-TERM,2.2uF,6.3V,0201,KYOCERA	C5016,C5018,C5134,C5029,C5136		SOFT_CAP	
	138S0831	5	CAP,TYPICAL,2.2UF,6.3V,0201,MURATA	C5016,C5018,C5134,C5029,C5136		TYPICAL_CAP	
MOJAVE	138S00159	1	CAP,SOFT-TERM,2.2uF,6.3V,0201,KYOCERA	C5611		SOFT_CAP	
	138S0831	1	CAP,TYPICAL,2.2UF,6.3V,0201,MURATA	C5611		TYPICAL_CAP	
DISPLAY B2Bs	138S00159	4	CAP,SOFT-TERM,2.2uF,6.3V,0201,KYOCERA	C5700,C5705,C5716,C5721		SOFT_CAP	
	138S0831	4	CAP,TYPICAL,2.2UF,6.3V,0201,MURATA	C5700,C5705,C5716,C5721		TYPICAL_CAP	
DMB/MESA B2Bs	138S00159	5	CAP,SOFT-TERM,2.2uF,6.3V,0201,KYOCERA	C5802-C5804,C5811,C5880		SOFT_CAP	
	138S0831	5	CAP,TYPICAL,2.2UF,6.3V,0201,MURATA	C5802-C5804,C5811,C5880		TYPICAL_CAP	
MAMBA LDO	138S00159	1	CAP,SOFT-TERM,2.2uF,6.3V,0201,KYOCERA	C5890		SOFT_CAP	
	138S0831	1	CAP,TYPICAL,2.2UF,6.3V,0201,MURATA	C5890		TYPICAL_CAP	
ACC BUCK OUTPUT	138S00159	5	CAP,SOFT-TERM,2.2uF,6.3V,0201,KYOCERA	C6320,C6321,C6322,C6323,C6324		SOFT_CAP	
	138S0831	5	CAP,TYPICAL,2.2UF,6.3V,0201,MURATA	C6320,C6321,C6322,C6323,C6324		TYPICAL_CAP	
	138S00160	4	CAP,SOFT-TERM,10UF,10V,0402,MURATA	C4907,C4903,C4904,C4931		SOFT_CAP	
	138S0979	4	CAP,TYPICAL,10UF,10V,0402,MUR/KYO	C4907,C4903,C4904,C4931		TYPICAL_CAP	
CHESTNUT LDO	138S00160	5	CAP,SOFT-TERM,10UF,10V,0402,MURATA	C5600,C5602,C5603,C5702,C5703		SOFT_CAP	
	138S0979	5	CAP,TYPICAL,10UF,10V,0402,MUR/KYO	C5600,C5602,C5603,C5702,C5703		TYPICAL_CAP	
RCAM (TELE)	138S00159	2	CAP,SOFT-TERM,2.2uF,6.3V,0201,KYOCERA	C4025,C4026		SOFT_CAP	D21x Specific
	138S0831	2	CAP,TYPICAL,2.2UF,6.3V,0201,MURATA	C4025,C4026		TYPICAL_CAP	D21x Specific

IKTARA DIODES SUB BOMS

PART NUMBER	ALTERNATE FOR PART NUMBER	BOM OPTION	REF DES	COMMENTS:
685-00172	685-00171	BOM_TABLE_ALTS	SUBBOM_DS	SUBBOM,MLB,SCHOTTKY DIODES,ONSEMI,D21

#31526972: Update Iktara Diodes APNs

PART#	QTY	DESCRIPTION	REFERENCE DESIGNATOR(S)	CRITICAL	BOM OPTION	
685-00171	1	SUBBOM,MLB,SCHOTTKY DIODES,DIODES,D21	SUBBOM_DS			Footprint is ONSEMI
371S00133	4	DIODES,SHOTTKY DIODE,30V,2A,0603	D3400,D3401,D3402,D3403		DIODES_DS	Primary is DIODES
371S00132	4	ONSEMI,SHOTTKY DIODE,30V,2A,0603	D3400,D3401,D3402,D3403		ONSEMI_DS	

www.xinxunwei.com 400-800-9990

NAND BOM Options

PART#	QTY.	DESCRIPTION	REFERENCE DESIGNATOR(S)	CRITICAL	BOM OPTION
335S00287	1	NAND,H,ULTRA,TLC	U2600	CRITICAL	ULTIMATE
335S00240	1	NAND,H,EXTREME,TLC	U2600	CRITICAL	EXTREME

PART NUMBER	ALTERNATE FOR PART NUMBER	BOM OPTION	REF DES	COMMENTS:
335S00284	335S00287	BOM_TABLE_ALTS	U2600	T,1z,ULTIMATE
335S00285	335S00287	BOM_TABLE_ALTS	U2600	T,BiCS3,ULTIMATE
335S00288	335S00287	BOM_TABLE_ALTS	U2600	S,BiCS3,ULTIMATE
335S00286	335S00287	BOM_TABLE_ALTS	U2600	SS,3Dv4,ULTIMATE
335S00228	335S00240	BOM_TABLE_ALTS	U2600	T,BiCS3,EXTREME
335S00247	335S00240	BOM_TABLE_ALTS	U2600	S,BiCS3,EXTREME
335S00276	335S00240	BOM_TABLE_ALTS	U2600	SS,3Dv4,EXTREME

Isolator Switch

PART NUMBER	ALTERNATE FOR PART NUMBER	BOM OPTION	REF DES	COMMENTS:
311S00126	311S00114	BOM_TABLE_ALTS	ALL	SPDT,TI

Mamba LDO

PART NUMBER	ALTERNATE FOR PART NUMBER	BOM OPTION	REF DES	COMMENTS:
353S00932	353S00576	BOM_TABLE_ALTS	U5890	STMICRO LDO

Load Switch

PART NUMBER	ALTERNATE FOR PART NUMBER	BOM OPTION	REF DES	COMMENTS:
353S00999	353S01039	BOM_TABLE_ALTS	U6100	TI,LOAD SW,TPS22915C
353S01007	353S01039	BOM_TABLE_ALTS	U6100	ONSEMI,LOAD SW,NCP333

Crystal Alts

PART NUMBER	ALTERNATE FOR PART NUMBER	BOM OPTION	REF DES	COMMENTS:
197S0612	197S00118	BOM_TABLE_ALTS	Y1000	NDK,XTAL,24MHz,1.6x1.2
197S00120	197S00118	BOM_TABLE_ALTS	Y1000	EPSON,XTAL,24MHz,1.6x1.2

CRITICAL PART#	COMMENT
197S00118	XTAL, 24M, 1612, TDK
197S0612	XTAL, 24M, 1612, NDK
197S00120	XTAL, 24M, 1612, EPSON

PMID1 Zener Diode

PART NUMBER	ALTERNATE FOR PART NUMBER	BOM OPTION	REF DES	COMMENTS:
371S00121	371S00030	BOM_TABLE_ALTS	DZ3300	DIODE,ZENER,20V

ZRB Caps

PART#	QTY	DESCRIPTION	REFERENCE DESIGNATOR(S)	CRITICAL	BOM OPTION
138S0683	1	1uF,25V,0402,X5R,10%	C3301	CRITICAL	COMMON

CRITICAL PART#	COMMENT
138S00185	MUR,CAP,ZRB,2.2UF,25V,0402
138S00186	MUR,CAP,ZRB,4.7UF,25V,0603

Global R/C Alternates

PART NUMBER	ALTERNATE FOR PART NUMBER	BOM OPTION	REF DES	COMMENTS:
118S0764	118S0717	BOM_TABLE_ALTS	ALL	RES, 3.92K, 0.1%, 0201
138S0648	138S0652	BOM_TABLE_ALTS	ALL	CAP,X5R,4.7UF,6.3V,0.65MM,0402,TAIYO
138S00024	138S0986	BOM_TABLE_ALTS	ALL	CAP,C0G,5.76PF,7.5UF,20V,40,0402,TAIYO/TDK
138S0706	138S0739	BOM_TABLE_ALTS	ALL	CAP,C0G,1UF,20%,10V,X5R,0201,MURATA
138S0945	138S0739	BOM_TABLE_ALTS	ALL	CAP,C0G,1UF,20%,10V,X5R,0201,KYOCERA
138S0739	138S0706	BOM_TABLE_ALTS	ALL	CAP,C0G,X5R,0.22UF,20%,6.3V,20%
132S0436	132S0400	BOM_TABLE_ALTS	ALL	CAP,C0G,X5R,0.22UF,20%,6.3V,01005
138S00133	138S00128	BOM_TABLE_ALTS	ALL	CAP,C0G,X5R,0.47UF,20%,6.3V,01005
138S00148	138S00150	BOM_TABLE_ALTS	ALL	CAP,0402,15UF,4V,KYOCERA
138S00149	138S00150	BOM_TABLE_ALTS	ALL	CAP,0402,14UF,4V,MURATA
138S00151	138S00150	BOM_TABLE_ALTS	ALL	CAP,0402,15UF,4V,TAIYO
138S00144	138S00143	BOM_TABLE_ALTS	ALL	CAP,0402,26UF,4V,MURATA
138S00143	138S00144	BOM_TABLE_ALTS	ALL	CAP,0402,22UF,4V,KYOCERA
138S00139	138S00138	BOM_TABLE_ALTS	ALL	CAP,0201,4UF,4V,MURATA
138S00138	138S00139	BOM_TABLE_ALTS	ALL	CAP,0201,4.7UF,4V,KYOCERA
138S00145	138S00146	BOM_TABLE_ALTS	ALL	CAP,0402,20UF,6.3V,KYOCERA
138S00141	138S00140	BOM_TABLE_ALTS	ALL	CAP,0201,4UF,6.3V,MURATA
138S00142	138S00140	BOM_TABLE_ALTS	ALL	CAP,0201,3UF,6.3V,SAMSUNG
138S00142	138S00141	BOM_TABLE_ALTS	ALL	CAP,0201,3UF,6.3V,SAMSUNG
138S00049	138S0831	BOM_TABLE_ALTS	ALL	CAP,0201,2.2UF,6.3V,KYOCERA
138S00163	138S00143	BOM_TABLE_ALTS	ALL	CAP,0402,22UF,4V,TY
138S00164	138S00138	BOM_TABLE_ALTS	ALL	CAP,0201,4UF,4V,TY
138S00165	138S00146	BOM_TABLE_ALTS	ALL	CAP,0402,20UF,6.3V,TY
138S00166	138S00140	BOM_TABLE_ALTS	ALL	CAP,0201,4UF,6.3V,TY
138S00140	138S00141	BOM_TABLE_ALTS	ALL	CAP,0201,4UF,6.3V,KYO
138S00048	138S00003	BOM_TABLE_ALTS	ALL	CAP,X5R,15UF,6.3V,0.65MM,0402,KYO
132S0639	132S00088	BOM_TABLE_ALTS	ALL	CAP,X5R,0.47UF,25V,0.35MM,0201,MUR

CRITICAL PART#	COMMENT
118S0717	RES, 3.92K, 0.1%, 0201
138S0652	CAP,X5R,4.7UF,6.3V,0.65MM,0402
138S0706	CAP,CER,X5R,1UF,20%,6.3V,0201
132S0400	CAP,CER,X5R,0.22UF,20%,6.3V,01005
138S0831	CAP,CER,X5R,2.2UF,20%,6.3V,0201
138S00128	CAP,CER,X5R,0.47UF,20%,6.3V,01005

CRITICAL PART#	COMMENT
138S00149	0402-3T,10.5uF@1V

CRITICAL PART#	COMMENT
138S00144	0402,16uF@1V

CRITICAL PART#	COMMENT
138S00139	0201,3uF@1V

CRITICAL PART#	COMMENT
138S00146	0402,5.1uF@3V

CRITICAL PART#	COMMENT
138S00141	0201,1.1uF@3V

Global Ferrites Alternates

	PART NUMBER	ALTERNATE FOR PART NUMBER	BOM OPTION	REF DES	COMMENTS:
	155S0581	155S00067	BOM_TABLE_ALTS	ALL	FERR, 240OHM, 0.38OHM DCR, 0201
	155S00194	155S0610	BOM_TABLE_ALTS	ALL	FERR BD, 150OHM, TDK
	155S00200	155S0610	BOM_TABLE_ALTS	ALL	FERR BD, 150OHM, TY
	152S00558	152S00557	BOM_TABLE_ALTS	ALL	IND,0.47UH,20%,2.5A,80MO,1608,TY
	152S00655	152S00656	BOM_TABLE_ALTS	ALL	IND,MLD,1.0UH,20%,3A,80MO,H=0.65,2016,TY
	152S00653	152S00651	BOM_TABLE_ALTS	ALL	IND,MLD,1.2UH,2.8A,100MO
	152S00654	152S00652	BOM_TABLE_ALTS	ALL	IND,MLD,1.2UH,20%,3A,72MO,H=0.8MM,2016,CTY
	155S00012	155S00168	BOM_TABLE_ALTS	ALL	FILTR, 65 OHMS, 0605
BUCK0 Slave	152S00710	152S00617	BOM_TABLE_ALTS	ALL	IND,0.1UH,29MOHM,6.1A,1608,H=.65
BUCK1 Slave	152S00711	152S00619	BOM_TABLE_ALTS	ALL	IND,0.1UH,21MOHM,7.2A,2012,H=.65
	152S00713	152S00621	BOM_TABLE_ALTS	ALL	IND,0.47UH,35MOHM,3.5A,2012,H=.65
BUCK8/9/10	152S00714	152S00622	BOM_TABLE_ALTS	ALL	IND,1UH,160MOHM,2.1A,2012,H=.65
Ansel L	152S00716	152S00626	BOM_TABLE_ALTS	ALL	IND,1UH,78MOHM,2.5A,2012,H=.80
BUCK0/2/4/11 Master	152S00717	152S00631	BOM_TABLE_ALTS	ALL	IND,1UH,60MOHM,3.2A,2016,H=.80
BUCK5/7	152S00718	152S00632	BOM_TABLE_ALTS	ALL	IND,1UH,52MOHM,3.2A,2016,H=.80
BUCK1 Slave	152S00719	152S00639	BOM_TABLE_ALTS	ALL	IND,0.47UH,50MOHM,3.0A,2012,H=.65
Boost Alt	152S00720	152S00640	BOM_TABLE_ALTS	ALL	IND,0.47UH,50MOHM,3.0A,2012,H=.65
BUCK1 Master	152S00721	152S00641	BOM_TABLE_ALTS	ALL	IND,1UH,60MOHM,3.6A,2016,H=.80
	155S00338	155S0661	BOM_TABLE_ALTS	ALL	FERR BD,330OHM,1.5A,51MOHM DCR,0201
	155S00340	155S0876	BOM_TABLE_ALTS	ALL	FERR BD,100OHM,1.1A,50MOHM DCR,01005
	155S00339	155S0660	BOM_TABLE_ALTS	ALL	FERR BD,220OHM,1.8A,40MOHM DCR,0201

CRITICAL PART#	COMMENT
155S0610	FERR BD, 150OHM, 01005

CRITICAL PART#	COMMENT
152S00617	IND,MLD,0.1UH,20%,6.1A,29MOHM,H=.65,1608
152S00620	IND,MLD,0.1UH,20%,7.2A,17MOHM,H=0.8,2012
152S00621	IND,MLD,0.47UH,20%,3.5A,53MO,H=.65,2012
152S00622	IND,MLD,1.0UH,20%,2.1A,100MO,H=.65,2012
152S00626	IND,MLD,1.5UH,20%,1.1A,160MO,H=.65,2012
152S00631	IND,MLD,1.0UH,20%,2.5A,78MO,H=0.8,2012
152S00632	IND,MLD,1.0UH,20%,3.2A,60MO,H=0.8,2016
152S00640	IND,MLD,0.47UH,3.8A,55MO,H=0.65MM,2012
152S00641	IND,MLD,0.47UH,4A,48MO,H=0.8MM,2012
152S00623	IND,MLD,1UH,3.6A,60MO,H=0.8MM,2016
152S00651	IND,1.2UH, 3A, 2016, 0.65Z
152S00650	IND,0.47UH,6.6A,3225,0.8Z

Multi-Vendor Criticals

CRITICAL PART#	COMMENT
377S0106	SUPPR,TRANS,VARISTOR,12V,33PF,01005
197S0446	XTAL,24MHZ,30PPM,9.5PF,60 OHM MAX,1612
155S0576	FERR BD,10 OHM,50%,750MA,0.07 DCR,01005
155S00168	FLTR,NOISE,65 OHMZ,3.4OHM,0.7-2GHZ,0605
138S0979	CAP,CER,X5R,10UF,20%,10V,0402,H=0.65MM
138S0692	CAP,CER,X5R,1UF,20%,6.3V,0201
138S0683	CAP,CER,X5R,1UF,10%,25V,0402
138S0652	CAP,CER,X5R,4.7UF,20%,6.3V,H=0.65MM,0402
138S00070	CAP,X5R,4.7UF,20%,25V,0402
138S00014	CAP,CER,1UF,20%,16V,X5R,0201,H=0.39MM
132S0664	CAP,CER,0.047UF,10%,25V,X5R,0201
132S0663	CAP,CER,X5R,1UF,10%,25V,0402
132S0534	CAP,CER,X5R,0.1UF,10%,25V,0201
132S0436	CAP,CER,X5R,0.22UF,20%,6.3V,01005
132S0396	CAP,CER,X5R,1000PF,10%,10V,01005
132S0316	CAP,CER,X5R,0.1UF,20%,6.3V,01005
132S0304	CAP,CER,X5R,0.22UF,20%,6.3V,0201
132S0296	CAP,CER,X5R,1000PF,10%,6.3V,01005

CRITICAL PART#	COMMENT
132S0288	CAP,CER,X5R,0.1UF,10%,16V,0201
132S0275	CAP,CER,X5R,470PF,10%,10V,01005
132S0249	CAP,CER,X7R,220PF,10%,10V,01005
132S0245	CAP,CER,X5R,0.01UF,10%,6.3V,01005
132S00093	CAP,X5R,0.022UF,20%,6.3V,01005
132S00025	CAP,CER,X5R,0.047UF,20%,6.3V,01005
132S00008	CAP,CER,0.1UF,10%,50V,X7R,0402
131S0883	CAP,CER,NP0/C0G,220PF,2%,50V,0201
131S0804	CAP,CER,27PF,5%,C0G,25V,0201
131S0307	CAP,CER,NP0/C0G,100PF,5%,16V,01005
131S0225	CAP,CER,NP0/C0G,15PF,5%,16V,01005
131S0223	CAP,CER,NP0/C0G,27PF,5%,16V,01005
131S0220	CAP,CER,NP0/C0G,12PF,5%,16V,01005
131S0216	CAP,CER,NP0/C0G,47PF,5%,16V,01005
131S00053	CAP,CER,C0G,220PF,5%,10V,01005
118S00068	RES,MF,1.3 MOHM,1%,200PPM,1/20W,0201
117S0055	RES,MF,1/20W,2M OHM,5,0201,SMD
107S0257	THERMISTOR,NTC,10K OHM,1%,B=3435,01005

www.xinxunwei.com 400-800-9990

Current as of D21 MCO 056-03352 REV 42

radio_mlb_ff: AGND_RF
radio_mlb_ff: SUAT1_KF
radio_mlb_ff: SUAT2_RF

0 0 0

BS0407
STDOFF-2.6OD1.6ID-0.96H-TH

BS0401
STDOFF-2.6OD1.6ID-0.96H-TH
1 CHASSIS_GND_BS401 4 34

BS0402
STDOFF-2.56OD1.4ID0.99H-SM
1 CHASSIS_GND_BS402 4

BS0403
STDOFF-2.9OD0.81H-SM1
1 CHASSIS_GND_BS403 4
Changed to 860-00746 in P2

0

NORTH_SCREW_EXPOSED

#25046211

C0413 220PF 5% 10V C0G-CERM 01005	C0414 56PF 5% 25V NP0-C0G-CERM 01005	C0415 18PF 2% 16V CERM 01005	C0416 4PF +/-0.1PF 16V NP0-C0G 01005	

34 4 CHASSIS_GND_BS401

C0401 220PF 5% 10V C0G-CERM 01005	C0402 220PF 5% 10V C0G-CERM 01005	C0403 100PF 5% 10V NP0-C0G 01005	C0404 56PF 5% 25V NP0-C0G-CERM 01005	C0405 18PF 2% 16V CERM 01005	C0406 4PF +/-0.1PF 16V NP0-C0G 01005

4 CHASSIS_GND_BS402

C0407 220PF 5% 10V C0G-CERM 01005	C0408 220PF 5% 10V C0G-CERM 01005	C0409 100PF 5% 10V NP0-C0G 01005	C0410 56PF 5% 25V NP0-C0G-CERM 01005	C0411 18PF 2% 16V CERM 01005	C0412 4PF +/-0.1PF 16V NP0-C0G 01005

4 CHASSIS_GND_BS403

C0417 220PF 5% 10V C0G-CERM 01005	C0418 220PF 5% 10V C0G-CERM 01005	C0419 100PF 5% 10V NP0-C0G 01005	C0420 56PF 5% 25V NP0-C0G-CERM 01005	C0421 18PF 2% 16V CERM 01005	C0422 4PF +/-0.1PF 16V NP0-C0G 01005

Front Shields

SH0401
SM
SHIELD-FRONT-UPPER-D21

SH0403
SM
SHIELD-LOWER-FRONT-D21

FIDUCIALS

FD0401	FID 0P5SM1P0SQ-NSP	ROOM=ASSEMBLY
FD0402	FID 0P5SM1P0SQ-NSP	ROOM=ASSEMBLY
FD0403	FID 0P5SM1P0SQ-NSP	ROOM=ASSEMBLY
FD0404	FID 0P5SQ-SMP3SQ-NSP	ROOM=ASSEMBLY
FD0405	FID 0P5SQ-SMP3SQ-NSP	ROOM=ASSEMBLY
FD0406	FID 0P5SQ-SMP3SQ-NSP	ROOM=ASSEMBLY
FD0407	FID 0P5SQ-SMP3SQ-NSP	ROOM=ASSEMBLY
FD0408	FID 0P5SQ-SMP3SQ-NSP	ROOM=ASSEMBLY
FD0409	FID 0P5SQ-SMP3SQ-NSP	ROOM=ASSEMBLY
FD0412	FID 0P5SQ-SMP3SQ-NSP	ROOM=ASSEMBLY
FD0410	FID 0P5SM1P0SQ-NSP	ROOM=ASSEMBLY
FD0411	FID 0P5SM1P0SQ-NSP	ROOM=ASSEMBLY

BS0405
STDOFF-2.57OD1.43ID-0.899H-SM

Back Shields

SH0400
SM
SHIELD-SOFT-UPPER-BACK-D21

SH0402
SM
SHIELD-SOFT-LOWER-BACK-D21

BS0404
STDOFF-2.57OD1.43ID-0.899H-SM

ZT0408
2.50R1.70-NSP

BS0406
STDOFF-2.6OD0.869H-TH

TOP SIDE

www.xinxunwei.com 400-800-9990

Test Points

POWER

Net	Test point	Function
	TP0520	POWER GROUND
PP_VBUS1_E75	TP0521	VBUS1
	TP0527	
无线充电到充电芯片的充电电压 PP_VBUS2_IKTARA	TP0541	VBUS2
PP_BATT_VCC	TP0515	VBATT
	TP0522	
PP_VDD_MAIN	TP0525	VDD_MAIN
	TP0526	
	FD0500 (FID, 0P5SM1P0SQ-NSP)	
	TP0528	LVCC TP
LVCC_CPU_GND (XW0520 OMIT, ROOM=SOC, SHORT-20L-0.05MM-SM)	TP0529	LVCC GROUND
IKTARA_COIL1_CONN	TP0523	CALLISTO
IKTARA_COIL2_CONN	TP0524	

DFU

Net	Test point	Function
电源和USB到CPU的强制DFU信号 PMU_HYDRA_TO_AP_FORCE_DFU	TP0514	FORCE DFU
DFU_STATUS	PP0504 (P2MM-NSM)	

E75

Net	Test point	Function
90_HYDRA_DP1_CONN_P	TP0502	ACCESSORY ID AND POWER
90_HYDRA_DP1_CONN_N	TP0503	
90_HYDRA_DP2_CONN_P	TP0504	
90_HYDRA_DP2_CONN_N	TP0505	
PP_HYDRA_ACC1_CONN	TP0506	
PP_HYDRA_ACC2_CONN	TP0507	
	TP0516	TP IS TO HELP WITH USB SI IN THE FACTORY FIXTURE.
HYDRA_CON_DETECT_CONN_L	TP0508	FOR DIAGS

AMUX

Net	Test point	Function
PMU_AMUX_AY	TP0513	ANALOG MUX A OUTPUT
PMU_AMUX_BY	FD0501 (FID, 0P5SM1P0SQ-NSP)	ANALOG MUX B OUTPUT Note: Fiducial used as test point

MOJAVE

Net	Test point
MESA_TO_BOOST_EN_CONN	TP0500
PP16V0_MESA_CONN	TP0501

LCM

Net	Test point	Function
PP_DISPLAY_BL12_CAT1_CONN	TP0530	LCM BACKLIGHT SINK1
PP_DISPLAY_BL12_CAT2_CONN	TP0531	LCM BACKLIGHT SINK2
PP_DISPLAY_BL12_ANODE_CONN	TP0532	LCM BACKLIGHT SOURCE
PP_DISPLAY_BL34_CAT1_CONN	TP0533	LCM BACKLIGHT SINK3
PP_DISPLAY_BL34_CAT2_CONN	TP0534	LCM BACKLIGHT SINK4
PP_DISPLAY_BL34_ANODE_CONN	TP0535	LCM BACKLIGHT SOURCE (3/4)

SENSE TP

Net	Test point	Function
AP_GPU_GND_SENSE (XW0540 OMIT, SHORT-20L-0.05MM-SM, ROOM=SOC)	TP0540	GPU GROUND SENSE

Sensor SPI

Net	Probe point
SPI_AOP_TO_IMU_SCLK	PP0540
SPI_AOP_TO_IMU_MOSI	PP0541
SPI_IMU_TO_AOP_MISO	PP0542
SPI_AOP_TO_COMPASS_CS_L	PP0543
COMPASS_TO_AOP_INT	PP0544
PHOSPHORUS_TO_AOP_INT	PP0545

Probe Points

SOC Debug

Net	Probe point
AP_TO_PMU_TEST_CLKOUT	PP0500
BOARD_ID0	PP0501
AP_DEBUG3	PP0503

SOC CPU/GPU

Net	Probe point
BUCK1_FB	
BUCK1_FB (XW0510 OMIT, ROOM=SOC, SHORT-20L-0.05MM-SM) PP_GPU_LVCC	TP0510
PP_CPU_PCORE (XW0511 OMIT, ROOM=SOC, SHORT-20L-0.05MM-SM) PP_CPU_PCORE_LVCC	TP0511
AP_CPU_PCORE_SENSE	PP0512
AP_VDD_GPU_SENSE	PP0513
TP_SOC_SENSE	PP0514
TP_VSS_CPU_SENSE	PP0515
TP_VSS_SENSE	PP0516

Per #27963227: BUCK1 is GPU
Change to BUCK1_FB to save 1 via in layout

PMU Debug

Net	Probe point
AOP_TO_DDR_SLEEP1_READY	PP0520
SPMI_PMU_BI_PMGR_SDATA	PP0521
#29098531:GPU THROTTLE PMU_TO_AP_THROTTLE_GPU1_L	PP0522
#29282469:SOCHOT AP_TO_PMU_SOCHOT_L CPU到电源重启复位信号（温控）	PP0523
#29162687:CODEC BCLK I2S_CODEC_ASP1_TO_AOP_AMPS_BCLK_R	PP0524
#29794618:CCG2 CCG2_TO_SMC_INT_L 快充芯片到CPU的中断信号	PP0525
HYDRA HYDRA_TO_TIGRIS_VBUS1_VALID_L	PP0550

PCIE Refclk

Net	Probe point
90_PCIE_AP_TO_NAND_REFCLK_P	PP0530
90_PCIE_AP_TO_NAND_REFCLK_N	PP0531

SOC DDR

Net	Probe point
TP_VDD_DCS_SENSE	PP0508
TP_DDR_VSS_SENSE	PP0509
TP_VDDQL_SENSE	PP0510

NAND Debug

Net	Probe point
SWD_AP_BI_NAND_SWDIO	PP0560
SWD_AOP_TO_MANY_SWCLK	PP0561
SPI_S4E_TO_AP_MISO_BOOT_CONFIG2	PP0562
NAND_ANI1_VREF	PP0563
NAND_ANI0_VREF	PP0564

BB UAT Debug

Net	Probe point
PP3V0_S2	PP0580
PP1V8_S2 电源输出的1.8V供电	PP0581
UAT_TUNER_RFFE_CLK	PP0582
UAT_TUNER_RFFE_DATA	PP0583

BACKLIGHT Debug

Net	Probe point
DWI_PMGR_TO_BACKLIGHT_DATA	PP0590
DWI_PMGR_TO_BACKLIGHT_CLK	PP0591

RF Debug

Net	Probe point
WLAN_TO_AP_TIME_SYNC	PP0595
AP_TO_NFC_FW_DWLD_REQ	PP0596

www.xinxunwei.com 400-800-9990

BOOTSTRAPPING:BOARD REV
BOARD ID
BOOT CONFIG

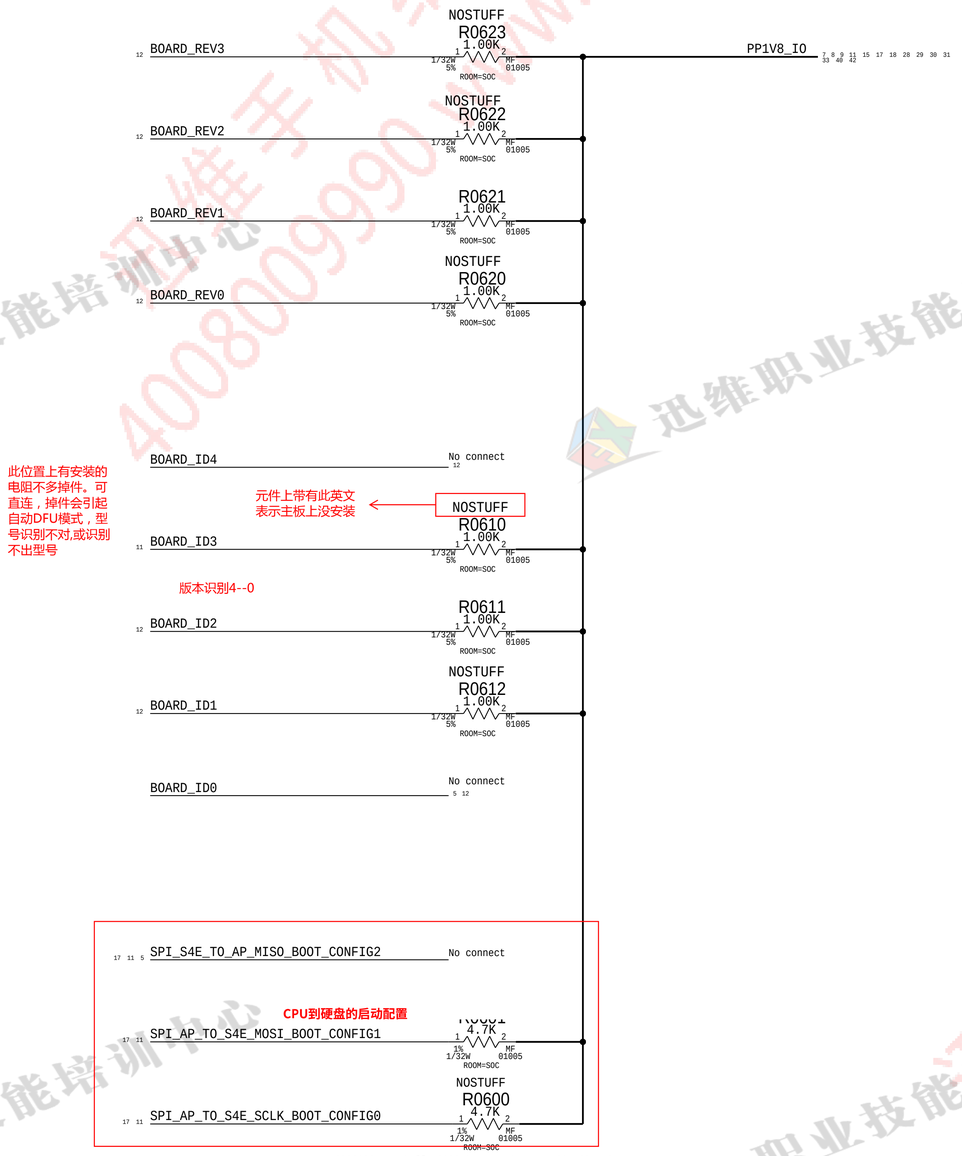

BOARD_REV[3:0]
FLOAT=LOW, PULLUP=HIGH

	1111	Pre-Proto (Placeholder)
	1110	PROTO1
	1101	SPARE
	1100	PROTO2
	1011	PROTO2 (HALOGEN DOE)
	1001	PROTO2v5
	xxxx	SPARES
	1000	EVT
	xxxx	SPARES
	0100	CARRIER
	xxxx	SPARE
SELECTED -->	0010	DVT
	xxxx	SPARE
	0000	PVT

Note: Future board revs TBD

BOARD_ID[4:0]
FLOAT=LOW, PULLUP=HIGH

	00010	D20 MLB
	00011	D20 DEV
SELECTED -->	00100	D21 MLB
	00101	D21 DEV
	01010	D201 MLB
	01011	D201 DEV
	01100	D211 MLB
	01101	D211 DEV

0=MLB, 1=DEV
01=D20x, 10=D21x
0=EUREKA, 1=KAROO

BOOT_CONFIG[2:0]
FLOAT=LOW, PULLUP=HIGH

	000	SPI0
	001	SPI0 TEST MODE
SELECTED -->	010	SPI0 NAND
	011	SPI0 NAND TEST
	100	n/a
	101	n/a
	110	SLOW SPI0 TEST
	111	FAST SPI0 TEST

www.xinxunwei.com 400-800-9990

SOC - USB, JTAG, XTAL

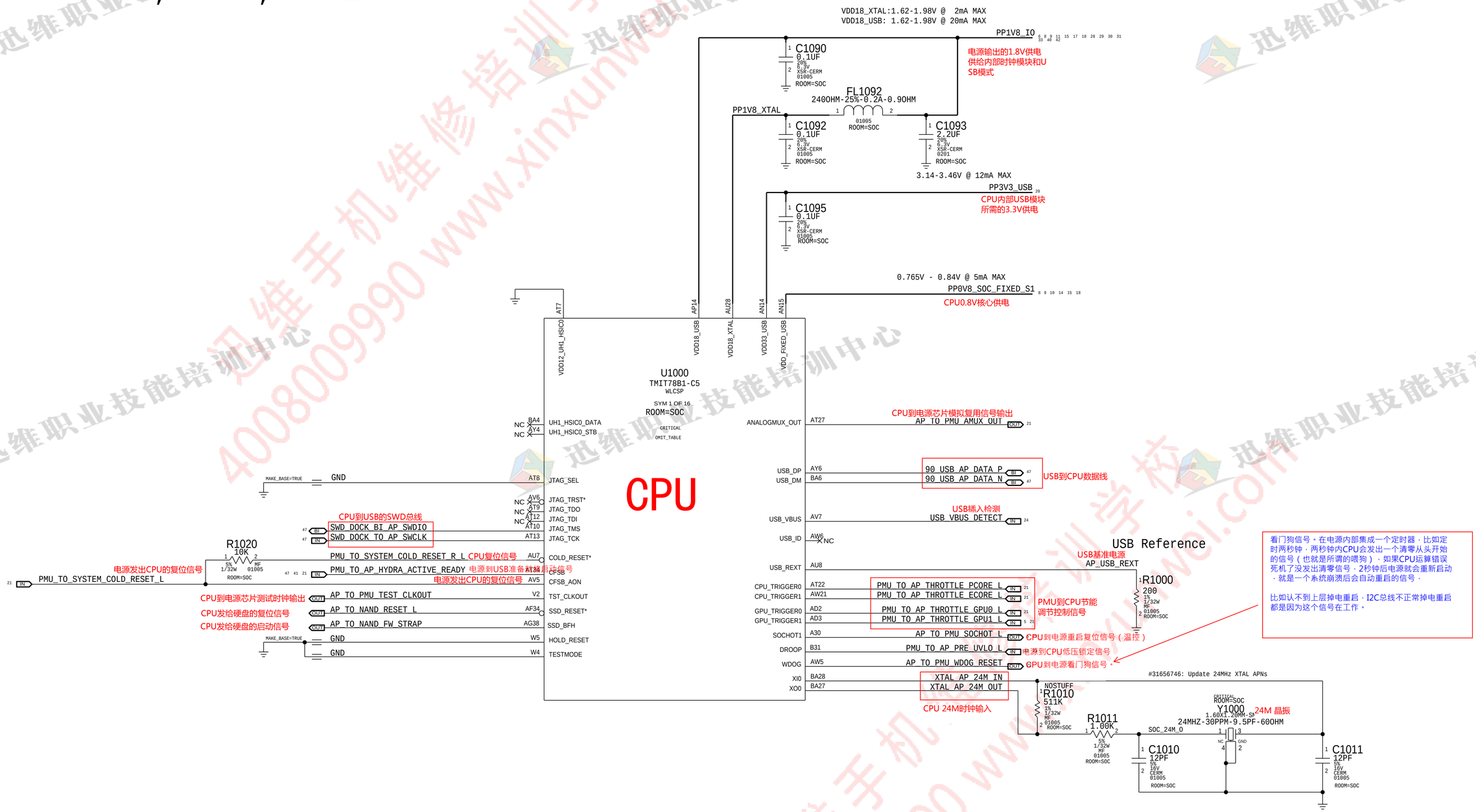

www.xinxunwei.com 400-800-9990

SOC - PCIE INTERFACES

VDD12_PCIE_REFBUF:1.08V - 1.26V @ 30mA MAX

CPU内部PCIE模块的基准电压

PP1V2_SOC — R1198 0.00 — PP1V2_SOC_PCIE_REFBUF — C1198 0.1UF

CPU内部PCIE模块1.8V供电

C1199 2.2UF — VDD18_PCIE:1.62V - 1.98V @ 81mA MAX — PP1V8_IO

CPU内部PCIE模块0.75V供电

VDD_FIXED_PCIE_xxx:0.765V - 0.84V @ 140mA MAX — PP0V8_SOC_FIXED_S1

CPU内部PCIE模块0.75V基准电压

PP0V8_SOC_FIXED_PCIE_REFBUF — VOLTAGE=0.9V — R1194 0.00 — C1194 0.1UF — C1193 0.1UF — C1192 1.0UF — C1191 2.2UF

PCIe Clock Request Pull-Ups

PP1V8_IO — R1100 100K — R1130 100K

PCIE_NAND_BI_AP_CLKREQ_L

PCIE_WLAN_BI_AP_CLKREQ_L

PCIe Reset Pull-Downs

PCIE_AP_TO_WLAN_RESET_L

PCIE_AP_TO_BB_RESET_L

PCIE_AP_TO_NAND_RESET_L

R1101 100K — R1121 100K — R1131 100K

PCIE总线
一种高速串行传输总线。在6S以后的手机中，CPU和基带、硬盘、WIFI之间的数据传输都是使用PCIE总线
REFCLK：参考时钟，CPU送出的基准时钟频庇，为了让设备与CPU之间在相同的频率下运行
CLKREQ：请求运行时钟，也就是请求输出参考时钟
RXD： 数据接收，PCIE总线数据传输是成对的，一条后面加P是正的，后面带N是负的
TXD：数据发射，也是一正一负
RESET：复位信号，由CPU发出。

U1000 TMIT78B1-C5 WLCSP SYM 2 OF 16

CPU

PCIE_CLKREQ0* — AL38 — PCIE_CLKREQ0*
PCIE_REF_CLK0_P — AW27 — PCIE_REF_CLK0_P
PCIE_REF_CLK0_N — AV27 — PCIE_REF_CLK0_N

耦合电容

C1100 0.22UF — C1101 0.22UF — C1102 0.22UF — C1103 0.22UF

CPU到硬盘的PCIE传输总线

90 PCIE NAND TO AP RXD P — 90 PCIE NAND TO AP RXD C P — AV29 — PCIE_RX0_P
90 PCIE NAND TO AP RXD N — 90 PCIE NAND TO AP RXD C N — AW29 — PCIE_RX0_N
90 PCIE AP TO NAND TXD P — 90 PCIE AP TO NAND TXD C P — AY30 — PCIE_TX0_P
90 PCIE AP TO NAND TXD N — 90 PCIE AP TO NAND TXD C N — BA30 — PCIE_TX0_N
PCIE AP TO NAND RESET L — AJ37 — PCIE_PERST0*

CPU到硬盘的复位信号

耦合电容：在电路中是电容的两端都是接信号数。作用是隔离滤除信号中的直流信号，避免前级后级之间互相干扰

如果耦合电容掉件了，尽量使用更换的方式，要直连的话也最好正负都直连，不要一对信号中一个直连一个耦合，

更换必须在相同位置拆的电容才能代换

PCIE_CLKREQ1* — AL37 — NC
PCIE_REF_CLK1_P — AW26 — NC
PCIE_REF_CLK1_N — AY26 — NC
PCIE_RX1_P — AV31 — NC
PCIE_RX1_N — AW31 — NC
PCIE_TX1_P — AY32 — NC
PCIE_TX1_N — BA32 — NC
PCIE_PERST1* — AK38 — NC

LINK0 | LINK3

LINK1 | LINK2

PCIE_EXT_REF_CLK_P — AU30
PCIE_EXT_REF_CLK_N — AT30

PCIE_CLKREQ3* — AJ36 — PCIE_WLAN_BI_AP_CLKREQ_L
PCIE_REF_CLK3_P — AY24 — 90_PCIE_AP_TO_WLAN_REFCLK_P
PCIE_REF_CLK3_N — BA24 — 90_PCIE_AP_TO_WLAN_REFCLK_N

耦合电容

CPU到WIFI的PCIE通讯总线

PCIE_RX3_P — BA36 — 90_PCIE_WLAN_TO_AP_RXD_C_P
PCIE_RX3_N — AY36 — 90_PCIE_WLAN_TO_AP_RXD_C_N
PCIE_TX3_P — AV35 — 90_PCIE_AP_TO_WLAN_TXD_C_P
PCIE_TX3_N — AW35 — 90_PCIE_AP_TO_WLAN_TXD_C_N
PCIE_PERST3* — AH36 — PCIE_AP_TO_WLAN_RESET_L

C1130 0.1UF — C1131 0.1UF — C1132 0.1UF — C1133 0.1UF

90 PCIE WLAN TO AP RXD P — 90 PCIE WLAN TO AP RXD N — 90 PCIE AP TO WLAN TXD P — 90 PCIE AP TO WLAN TXD N

PCIE_CLKREQ2* — AK37 — PCIE_BB_BI_AP_CLKREQ_L
PCIE_REF_CLK2_P — AV25 — 90_PCIE_AP_TO_BB_REFCLK_P
PCIE_REF_CLK2_N — AW25 — 90_PCIE_AP_TO_BB_REFCLK_N

CPU到基带的PCIE通讯总线

PCIE_RX2_P — BA34 — 90_PCIE_BB_TO_AP_RXD_C_P
PCIE_RX2_N — AY34 — 90_PCIE_BB_TO_AP_RXD_C_N
PCIE_TX2_P — AV33 — 90_PCIE_AP_TO_BB_TXD_C_P
PCIE_TX2_N — AW33 — 90_PCIE_AP_TO_BB_TXD_C_N
PCIE_PERST2* — AJ38 — PCIE_AP_TO_BB_RESET_L

CPU到基带的PCIE总线复位信号

C1120 0.1UF — C1121 0.1UF — C1122 0.1UF — C1123 0.1UF

90 PCIE BB TO AP RXD P — 90 PCIE BB TO AP RXD N — 90 PCIE AP TO BB TXD P — 90 PCIE AP TO BB TXD N

PCIE_REXT — AU32 — AP_PCIE_RCAL — R1150 200

PCIE总线外部电阻

REXT在MIPI总线和PCIE总线都存丰这样的电阻，作用是来设定总线端口电流，如果此电阻掉件会引起该总线不工作。如认不到硬盘，MIPI总线的则引起不照相不显示等

PCIE LINK 0 — PCIE LINK 3 — PCIE LINK 2

www.xinxunwei.com 400-800-9990

SOC - MIPI & ISP INTERFACES

VDD_FIXED_MIPI:0.765V - 0.84V @ 40mA MAX

CPU内部MIPI模块0.75V供电

PP0V8_SOC_FIXED_S1

C1290 0.1UF 20% 6.3V X5R-CERM 01005 ROOM=SOC

C1291 2.2UF 20% 6.3V X5R-CERM 0201 ROOM=SOC

G12 G14 VDD_FIXED_MIPI

VDD18_MIPI:1.62V - 1.98V @ 10mA MAX

CPU内部MIPI模块1.8V供电

PP1V8_IO

C1295 2.2UF 20% 6.3V X5R-CERM 0201 ROOM=SOC

C1296 0.1UF 20% 6.3V X5R-CERM 01005 ROOM=SOC

F11 F13 VDD18_MIPI

U1000 TMIT78B1-C5 WLCSP SYM 3 OF 16

CPU

FCAM MIPI

CPU到前置相头MIPI总线

90_MIPI_FCAM_TO_AP_DATA0_P	B12	MIPI0C_DPDATA0
90_MIPI_FCAM_TO_AP_DATA0_N	A12	MIPI0C_DNDATA0
90_MIPI_FCAM_TO_AP_DATA1_P	B14	MIPI0C_DPDATA1
90_MIPI_FCAM_TO_AP_DATA1_N	A14	MIPI0C_DNDATA1
90_MIPI_FCAM_TO_AP_CLK_P	A13	MIPI0C_DPCLK
90_MIPI_FCAM_TO_AP_CLK_N	B13	MIPI0C_DNCLK
MIPI0C_REXT	D12	MIPI0C_REXT
	D13	MIPI1C_REXT
	B17	MIPI1C_DPDATA0
	A17	MIPI1C_DNDATA0
	B15	MIPI1C_DPDATA1
	A15	MIPI1C_DNDATA1
	A16	MIPI1C_DPCLK
	B16	MIPI1C_DNCLK

R1250 200 1% 1/32W MF 01005 ROOM=SOC 前置相头MIPI总线外部电阻

REXT在MIPI总线和PCIE总线都存丰这样的电阻，作用是来设定总线端口电流，如果此电阻掉件会引起该总线不工作。如认不到硬盘，MIPI总线的则引起不照相不显示等

Display MIPI

CPU到前置相头MIPI总线

90_MIPI_AP_TO_DISPLAY_DATA0_P	A10	MIPID_DPDATA0
90_MIPI_AP_TO_DISPLAY_DATA0_N	B10	MIPID_DNDATA0
90_MIPI_AP_TO_DISPLAY_DATA3_P	B9	MIPID_DPDATA1
90_MIPI_AP_TO_DISPLAY_DATA3_N	A9	MIPID_DNDATA1
90_MIPI_AP_TO_DISPLAY_DATA2_P	A7	MIPID_DPDATA2
90_MIPI_AP_TO_DISPLAY_DATA2_N	B7	MIPID_DNDATA2
90_MIPI_AP_TO_DISPLAY_DATA1_N	A6	MIPID_DPDATA3
90_MIPI_AP_TO_DISPLAY_DATA1_P	B6	MIPID_DNDATA3
90_MIPI_AP_TO_DISPLAY_CLK_P	A8	MIPID_DPCLK
90_MIPI_AP_TO_DISPLAY_CLK_N	B8	MIPID_DNCLK

Pin assignment optimized for D21/D211 MLB
DISPLAY MIPI LANE SWAPS
SOC D1 -> DISPLAY D3
SOC D3 -> DISPLAY D1 (N & P SWAP)

显示屏MIPI总线外部电阻

MIPID_REXT D11 MIPID_REXT

R1252 200 1% 1/32W MF 01005 ROOM=SOC

NC AA3	DISP_TOUCH_BSYNC0	
NC AB4	DISP_TOUCH_BSYNC1	
NC AB6	DISP_TOUCH_EB	
NC AA4	DISP_I2C_SCL	
NC AA5	DISP_I2C_SDA	
NC Y4	DISP_POL	

ISP_I2C0_SCL	W35	I2C0_ISP_SCL	后相头广角相头（主相头）I2C总线
ISP_I2C0_SDA	V38	I2C0_ISP_SDA	
ISP_I2C1_SCL	W36	I2C1_ISP_SCL	后相头长焦相头（副相头）I2C总线
ISP_I2C1_SDA	Y36	I2C1_ISP_SDA	
ISP_I2C2_SCL	Y34	I2C2_ISP_SCL	前置相头I2C总线
ISP_I2C2_SDA	Y38	I2C2_ISP_SDA	
ISP_I2C3_SCL	AA37	I2C3_ISP_SCL	照相机供电芯片I2C总线
ISP_I2C3_SDA	AB38	I2C3_ISP_SDA	
SENSOR_INT	AB36	NC	
SENSOR0_CLK	U38	AP_TO_WIDE_CLK_R	R1240 33.2 1% 1/32W MF 01005 ROOM=SOC CPU到广角相头时钟信号 AP_TO_WIDE_CLK
SENSOR1_CLK	R38	AP_TO_TELE_CLK_R	R1241 33.2 1% 1/32W MF 01005 ROOM=SOC CPU到长焦相头时钟信号 AP_TO_TELE_CLK
SENSOR2_CLK	R37	AP_TO_FCAM_CLK_R	R1242 33.2 1% 1/32W MF 01005 ROOM=SOC CPU到长焦相头时钟信号 AP_TO_FCAM_CLK
SENSOR0_RST	V34	NC	
SENSOR1_RST	U35	ISP_TO_TELE_SHUTDOWN_L	CPU到长焦相头开启信号
SENSOR2_RST	AB34	ISP_TO_WIDE_SHUTDOWN_L	CPU到广角相头开启信号
SENSOR3_RST	AC37	NC	
SENSOR4_RST	AA35	ISP_TO_FCAM_SHUTDOWN_L	CPU到前置相头开启信号

#30699217: Change camera shutdown pins

工厂诊断测试点

SENSOR0_ISTRB	V36	AP_DEBUG3
SENSOR1_ISTRB	U36	NC
SENSOR0_XSHUTDOWN	U37	NC
SENSOR1_XSHUTDOWN	T37	AP_TO_MUON_BL_STROBE_EN

CPU发给背光芯片的开启信号（前置相机闪光灯，用前置拍照屏幕会变全白）

ISP I2C0

相线或开头以PP、PN开头的都是供电

PP1V8_IO

电阻一端接供电一端接信号线的为上拉电阻，一端接信号一端接地的为下拉电阻，一般不能直连。两端都接供电的是保险限流作用，两端都接信号的为保险或隔离作用，可以直连

R1201 1.00K 5% 1/32W MF 01005 ROOM=SOC

R1202 1.00K 5% 1/32W MF 01005 ROOM=SOC

I2C0_ISP_SCL
I2C0_ISP_SDA

细线表示信号、数据线

ISP I2C1

PP1V8_IO

R1211 1.00K 5% 1/32W MF 01005 ROOM=SOC

R1212 1.00K 5% 1/32W MF 01005 ROOM=SOC

I2C1_ISP_SCL
I2C1_ISP_SDA

ISP I2C2

PP1V8_IO

#29684166: Freq change to 400K, change PU to 2.2K

R1221 2.2K 5% 1/32W MF 01005 ROOM=SOC

R1222 2.2K 5% 1/32W MF 01005 ROOM=SOC

I2C2_ISP_SCL
I2C2_ISP_SDA

ISP I2C3

PP1V8_IO

#29684166: Freq change to 400K, change PU to 4.3K

R1231 4.3K 1% 1/32W MF 01005 ROOM=SOC

R1232 4.3K 1% 1/32W MF 01005 ROOM=SOC

I2C3_ISP_SCL
I2C3_ISP_SDA

www.xinxunwei.com 400-800-9990

SOC - LPDP INTERFACES

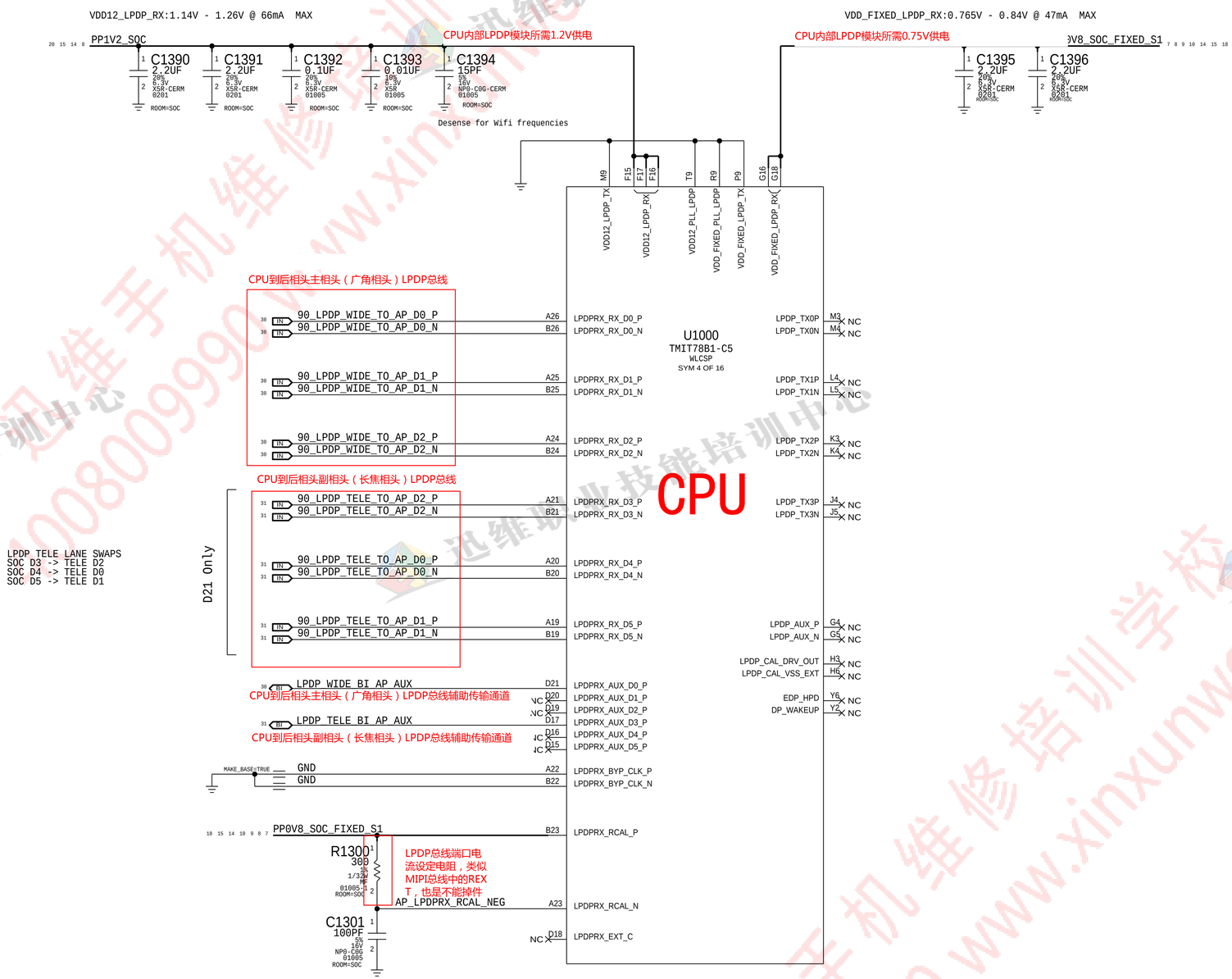

www.xinxunwei.com 400-800-9990

SOC - SERIAL INTERFACES

I2C总线：串行通讯总线，一般手机维修人员所说的查总线就是I2C总线，基本上I2C总线中间带AP的不管那一组都会引起触发开机后小电流50-80定住或掉电归零。
I2C总线有条信号线：
SCL: 串行时钟
SDA: 串行数据
所有的I2C总线都是1.8V电压上拉的，触发后都能测到1.8V电压。

I2S总线有
MCLK：主时钟，用于同步CPU和音频的I2S模块工作频率，不一定都有使用，
BCLK：串行时钟，跟I2C总线中的SCL作用一样，通俗点说就是用来控制什么时候由CPU传输数据给音频，什么时候又是由音频传输数据给CPU
LRCLK: 帧时钟，用来控制切换左右声道的数据。
DIN DOUT: 串行数据传输，IN是输入，OUT是输出。
到音频的这5条件有一条虚焊或断线都是没声音，开机进界面很卡

I2S总线：音频传输总线，用于芯片之音数字音频的传输，比如通话过程中，我方说的声音由麦克风采集后送给音频，音频通过I2S总线把声音发给CPU，CPU又通过I2S总线把声音发给基带，然后基带处理后发射出去。CPU到蓝牙之间也是用的I2S总线传输声间的。手机芯片之间的声音传输都是I2S

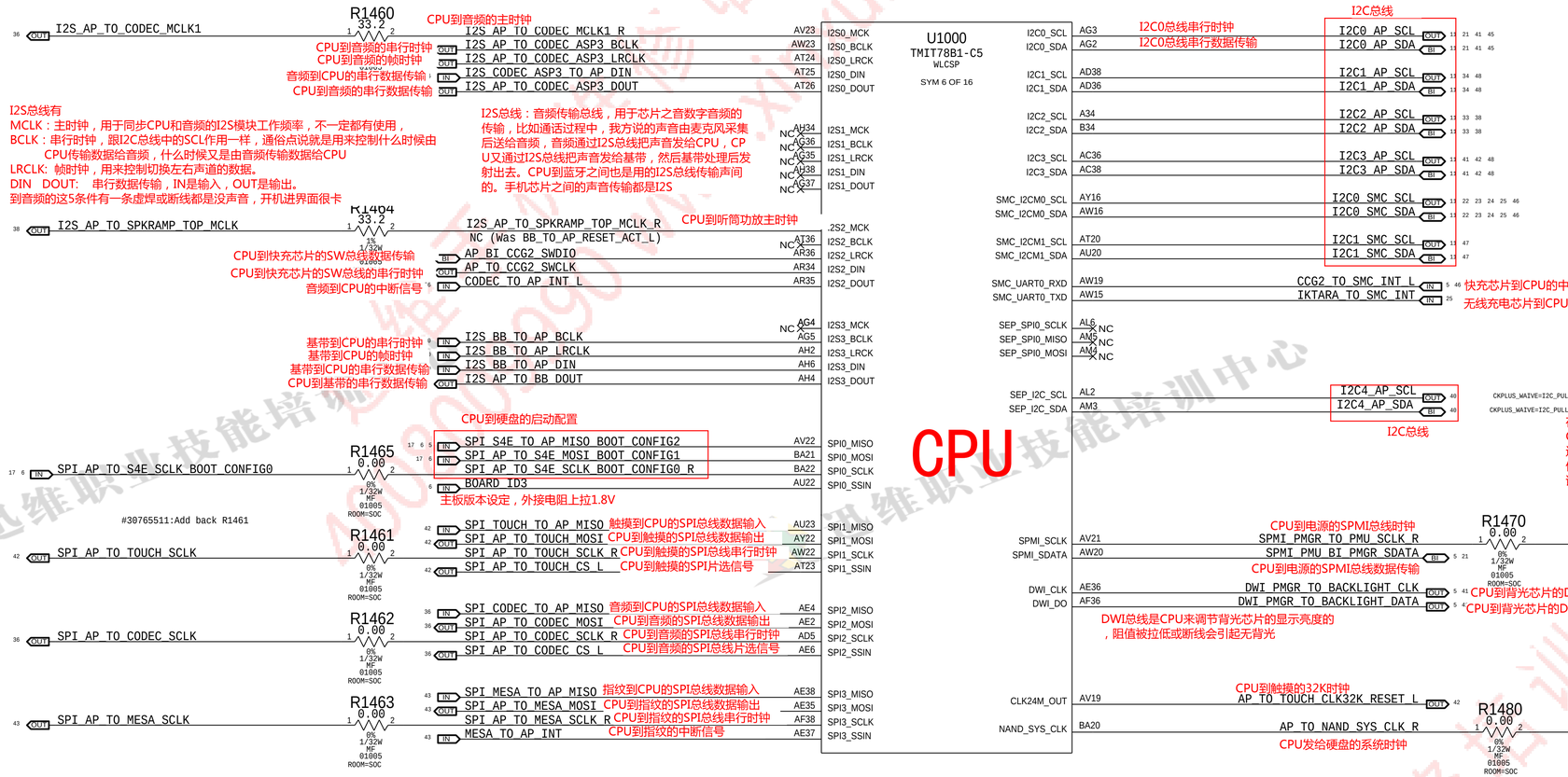

SPI: Route as Daisy-Chain (No T's Allowed)

SPI总线：串行高速通讯总线，在手机中一般有4根信号线，
MISO：数据传输，M是主设备，I是IN输入，S是从设备，O是OUT输出，CPU是主设备，相连的芯片是从设备，就是从设备输出数据到CPU
MOSI：CPU输出数据到从设备。
SCLK：串行时钟，用来控制什么时候发送数据，什么时候接收数据，比如高电平时接收，低电平发送
CS或SS：片选信号，SPI总线上可以同时接很多从设备，只有CPU选中的设备才可以接收发送数据，手机中一般都是一组SPI总线只接一个从设备，

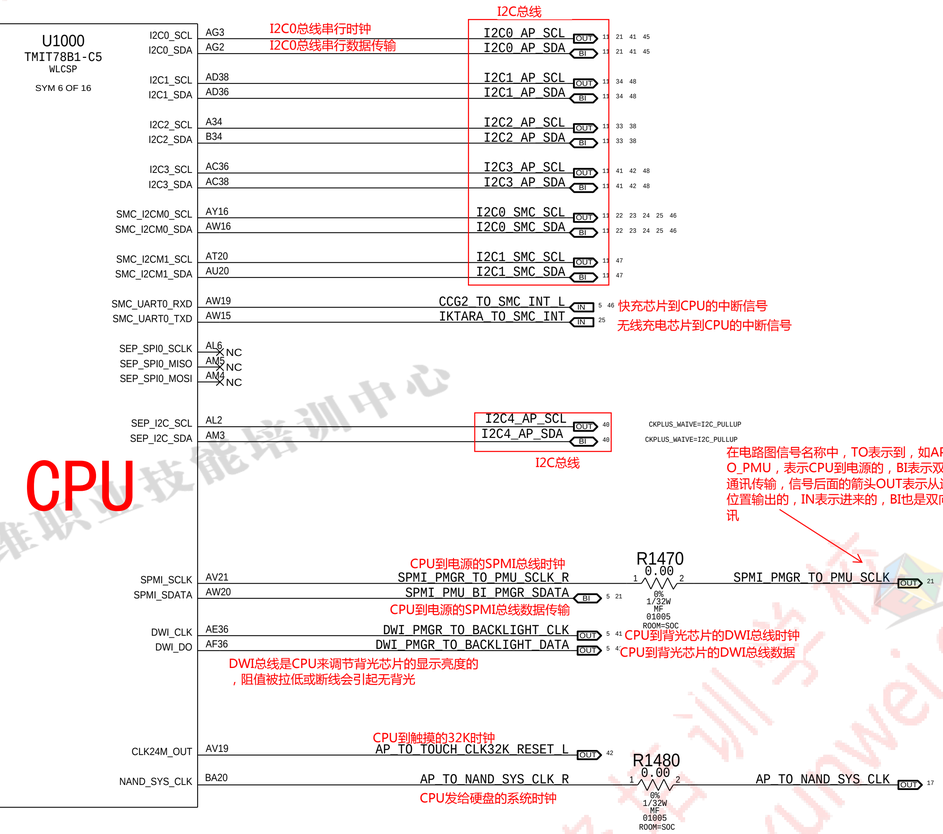

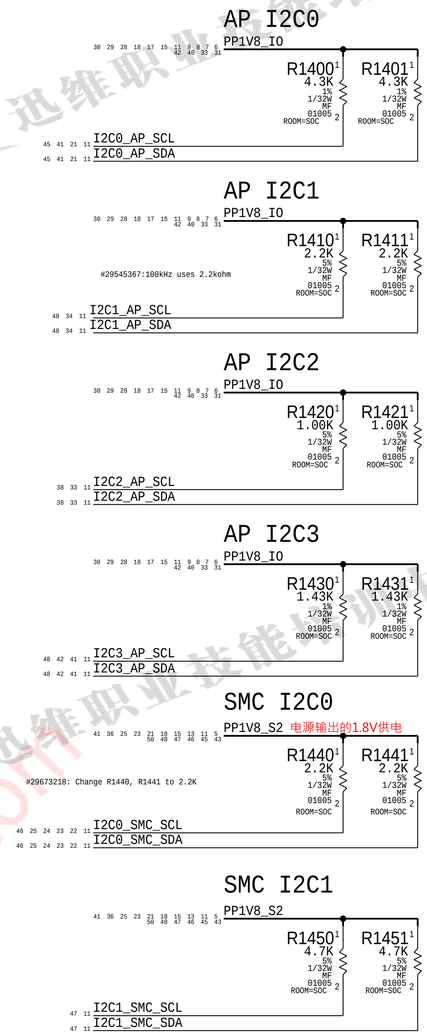

www.xinxunwei.com 400-800-9990

SOC - GPIO INTERFACES

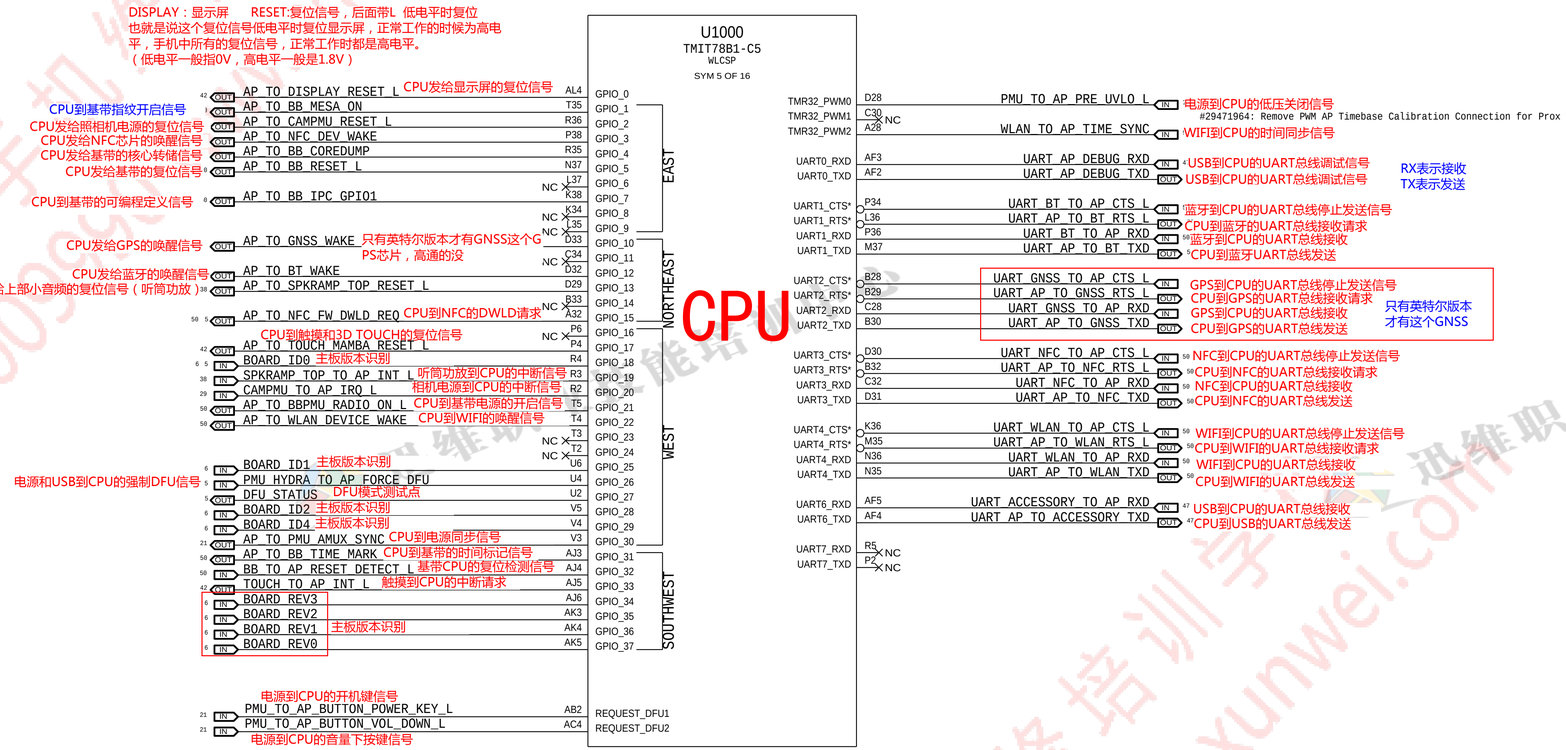

www.xinxunwei.com 400-800-9990

SOC - AOP

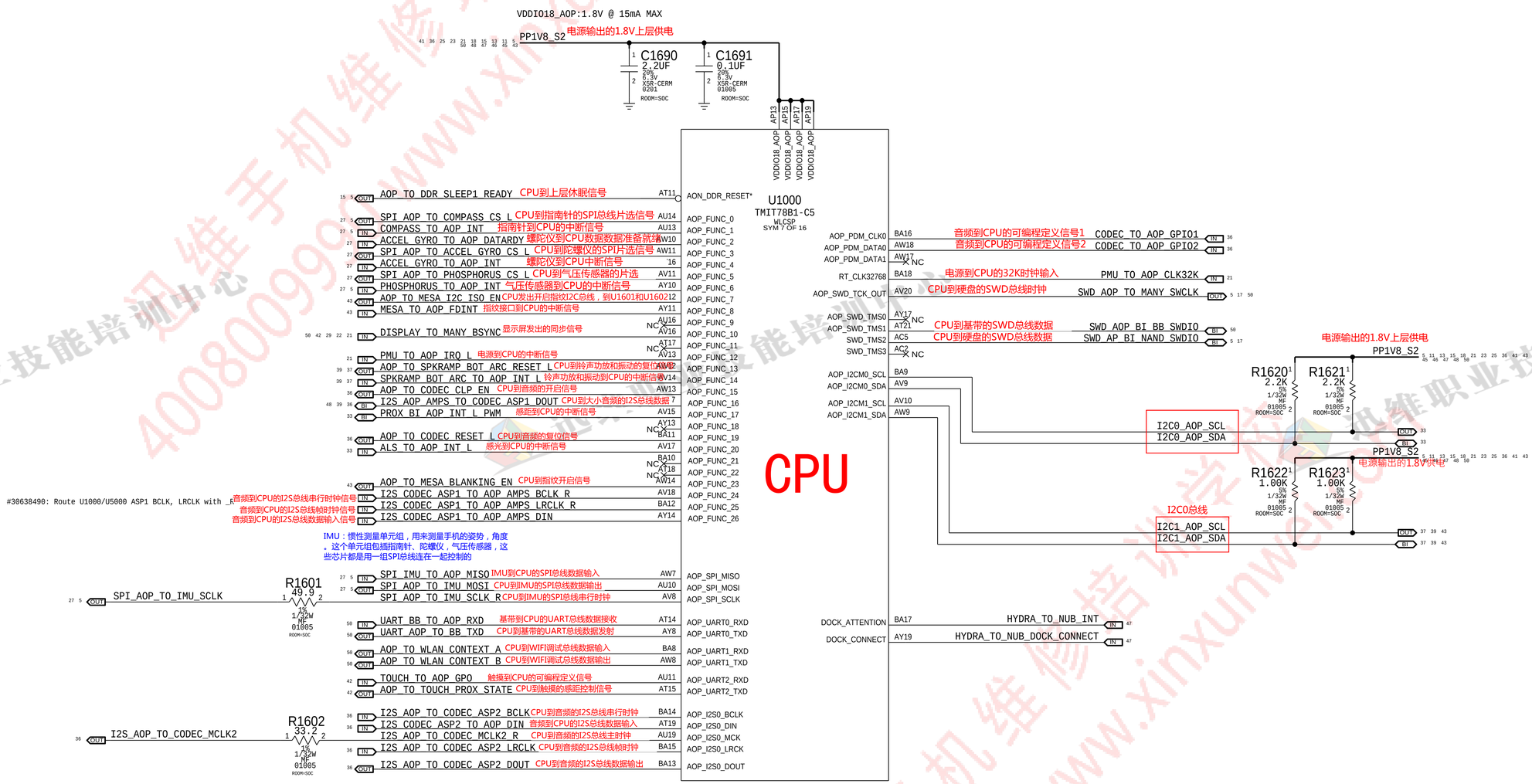

www.xinxunwei.com 400-800-9990

SOC - CPU, GPU & SOC RAILS

1.06V @ 11.0A MAX
0.8V @ 6A MAX
0.575V @ 2.7A MAX
PP_CPU_PCORE CPU核心供电

C1702 4.7UF 20% 4V CER-X5R 0201 ROOM=SOC
C1703 4.7UF 20% 4V CER-X5R 0201 ROOM=SOC

OMIT XW1701 SHORT-20L-0.05MM-SM ROOM=SOC 到电源的核心供电反馈信号，用来调整核心供电电压

C1704 C1705 C1706 C1707 15UF 20% 4V X5R 0402-D2X-1
C1708 C1709 C1710 C1711 C1712 C1713 15UF 20% 4V X5R 0402-D2X-1

CPU核心供电

在苹果电路图中，名称前面P表示供电，PP是正压，PN是负压
PP后面跟的数字表示电压值。
如PP0V7：表示正的0.7V。
PN5V7：表示负的5.7V。

1.06V @ 18.3A MAX
0.8V @ 10.6A MAX
0.575V @ 3.4A MAX
PP_GPU
CPU内部显示核心供电，电压0.8V左右此供电亮白苹果后进系统之前才会出来

C1730 C1731 4.7UF 20% 4V CER-X5R 0201 ROOM=SOC

OMIT XW1731 SHORT-20L-0.05MM-SM ROOM=SOC NO_XNET_CONNECTION 送到电源的GPU供电反馈 BUCK1_FB OUT

C1734 C1735 C1736 C1737 C1738 C1739 C1740 C1741 15UF 20% 4V X5R 0402-D2X-1

U1000 TMIT78B1-C5 WLCSP SYM 8 OF 16 ROOM=SOC

CPU

VDD_CPU: AA14 AA16 AB11 AB13 AB15 AB17 AB19 AC20 AD15 AE14 AF20 AG9 AG15 AH10 AH12 AH14 AH16 AH18 AH20
VDD_GPU: F25 J16 F31 G20 G22 G24 G26 J28 H11 H15 H19 H23 H31 J12 J18 J22 J24 J26 J30 L16 K17 K29 L12 L18 L22 L28 M23 L24 N22 N24 N28

0.7V @ 75mA MAX
PP0V7_VDD_LOW_S2 CPU 的 0.7v供电
C1750 4.7UF 20% 4V CER-X5R 0201 ROOM=SOC
VDD_LOW: AM15 AM17 AM19 AM21 AN16 AN18 AN20

1.01V @ 2.1A MAX
0.735V @ 0.6A MAX
PP_CPU_SRAM
C1772 C1773 15UF 20% 4V X5R 0402-D2X-1
VDD_CPU_SRAM: AA12 AB18 AC9 AC14 AE20 AF14 U14
AP_CPU_PCORE_SENSE OUT — VDD_CPU_SENSE: AH21

1.06V @ 1.1A MAX
0.80V @ 0.63A MAX
0.675V @ 0.19A MAX
PP_GPU_SRAM GPU显示核心缓存供电，1V电压，也是要快进系统才出来
C1781 C1782 15UF 20% 4V X5R 0402-D2X-1
VDD_GPU_SRAM: N26 H13 H17 H21 H25 K11 K19 K23 G30 M29
AP_VDD_GPU_SENSE OUT GPU电压检测信号，到电源芯片 — VDD_GPU_SENSE: N23

OMIT XW1790 SHORT-20L-0.05MM-SM ROOM=SOC 送到电源 的E核心供电反馈 BUCK11_FB OUT

1.06V @ 4.3A MAX
0.8V @ 2.8A MAX
0.575V @ 1.4A MAX
PP_CPU_ECORE
CPU的E核心供电
VDD_ECPU: AA10 U10 U12 V13 V15 Y13 Y15
C1791 C1792 C1793 15UF 20% 4V X5R 0402-D2X-1
C1794 4.7UF 20% 4V CER-X5R 0201 ROOM=SOC

VDD_FIXED_CPU W14 — CPU0.8V供电 — PP0V8_SOC_FIXED_S1 — 0.8V @ 6mA MAX
VDD_FIXED_PLL_GPU K21 — CPU0.8V供电 — PP0V8_SOC_FIXED_S1
VDD_FIXED_PLL_SOC L20 — 0.8V @ G+10=16mA MAX

VDD12_PLL_CPU W16
VDD12_PLL_GPU L21
VDD12_PLL_SOC M20
系统芯片组1.2V供电 PP1V2_SOC
C1720 C1721 C1722 C1723 0.1UF 20% 4V X5R-CERM 01005 / 2.2UF 20% 6.3V X5R-CERM 0201
1.2V @ 7mA MAX (CPU)
1.2V @ 7mA MAX (GPU)
1.2V @ 20mA MAX (SOC)

0.765V @ 4.9A MAX
0.635V @ 2.6A MAX
PP_SOC_S1
系统芯片组供电，0.8V左右
C1760 C1761 4.7UF 20% 4V CER-X5R 0201 ROOM=SOC

OMIT XW1760 SHORT-20L-0.05MM-SM ROOM=SOC NO_XNET_CONNECTION
BUCK2_FB OUT 到电源的系统芯片组供电反馈信号，用来调整SOC供电电压。

C1762 C1763 C1764 15UF 20% 4V X5R 0402-D2X-1

U1000 TMIT78B1-C5 WLCSP SYM 9 OF 16 ROOM=SOC

CPU

VDD_SOC: AA9 AA18 AA22 AA24 AA28 AA30 AB21 AB25 AB27 AC22 AC24 AC28 AC30 AD9 AD21 AD25 AD27 AD29 AE22 AE24 AE28 AF25 AF27 AG22 AG24 AG28 AH25 AH27 AJ16 AJ18 AJ22 AJ24 AJ28 AK13 AK15 AK19 AK21 AK25 AK27 AL12 AL16 AL18 AL22 AL24 AL28 AL30 AM13 AM25 AN12 AN22 AN24 F22
G13 J20 L19 M13 M21 N10 N12 N16 N18 N29 P13 P15 P19 P21 P25 P27 R10 R12 R16 R18 R22 R24 R28 T13 T15 T19 T21 T25 T27 U16 U18 U22 U24 U28 U30 V19 V21 V25 V27 W18 W22 W24 W28 W30 Y19 Y25 Y21 Y27

VDD_SOC_SENSE: P23 — GPU电压检测信号，到PP0514测试点 — TP_SOC_SENSE OUT

www.xinxunwei.com 400-800-9990

SOC - POWER SUPPLIES

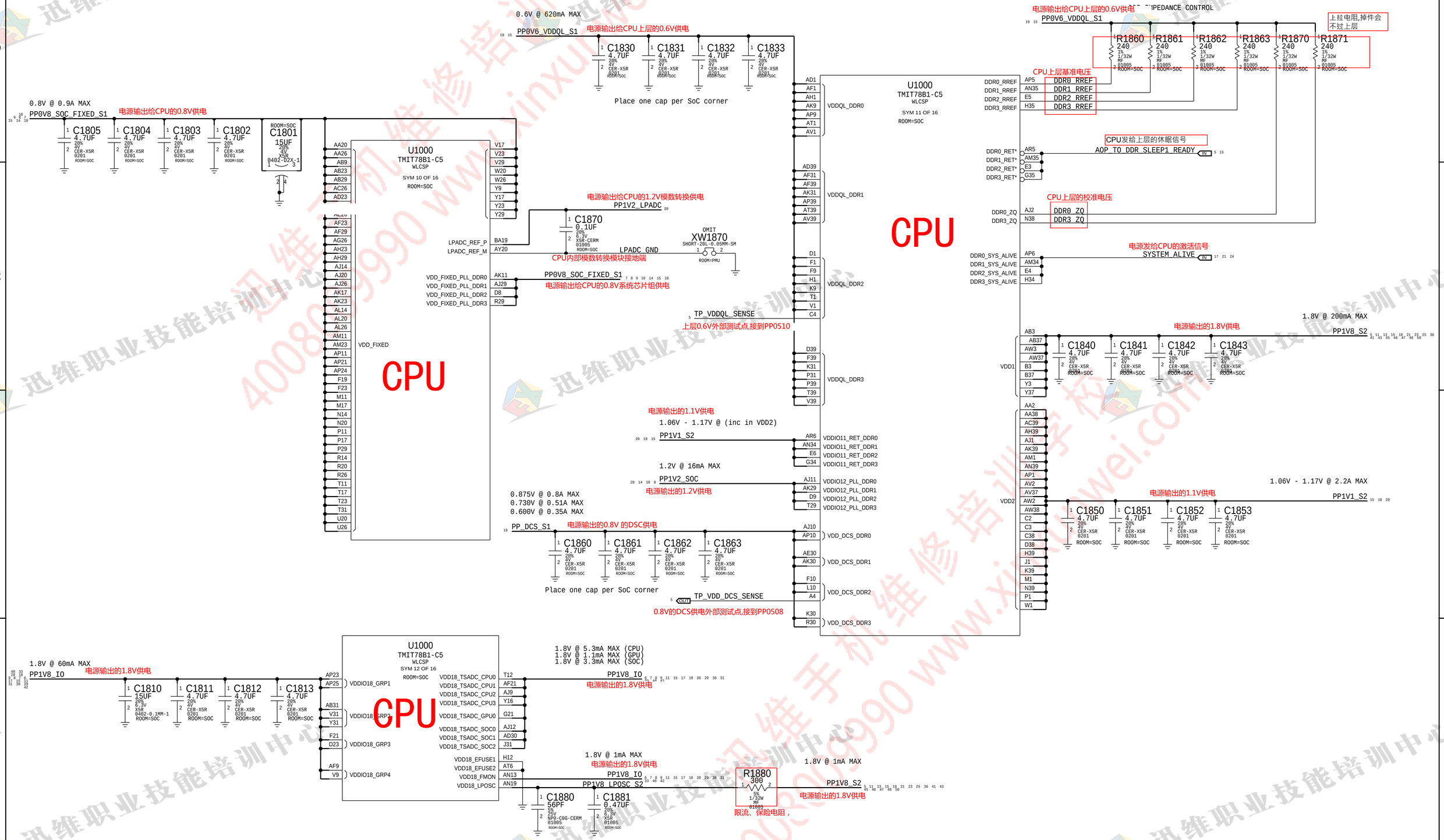

www.xinxunwei.com 400-800-9990

SOC - POWER SUPPLIES

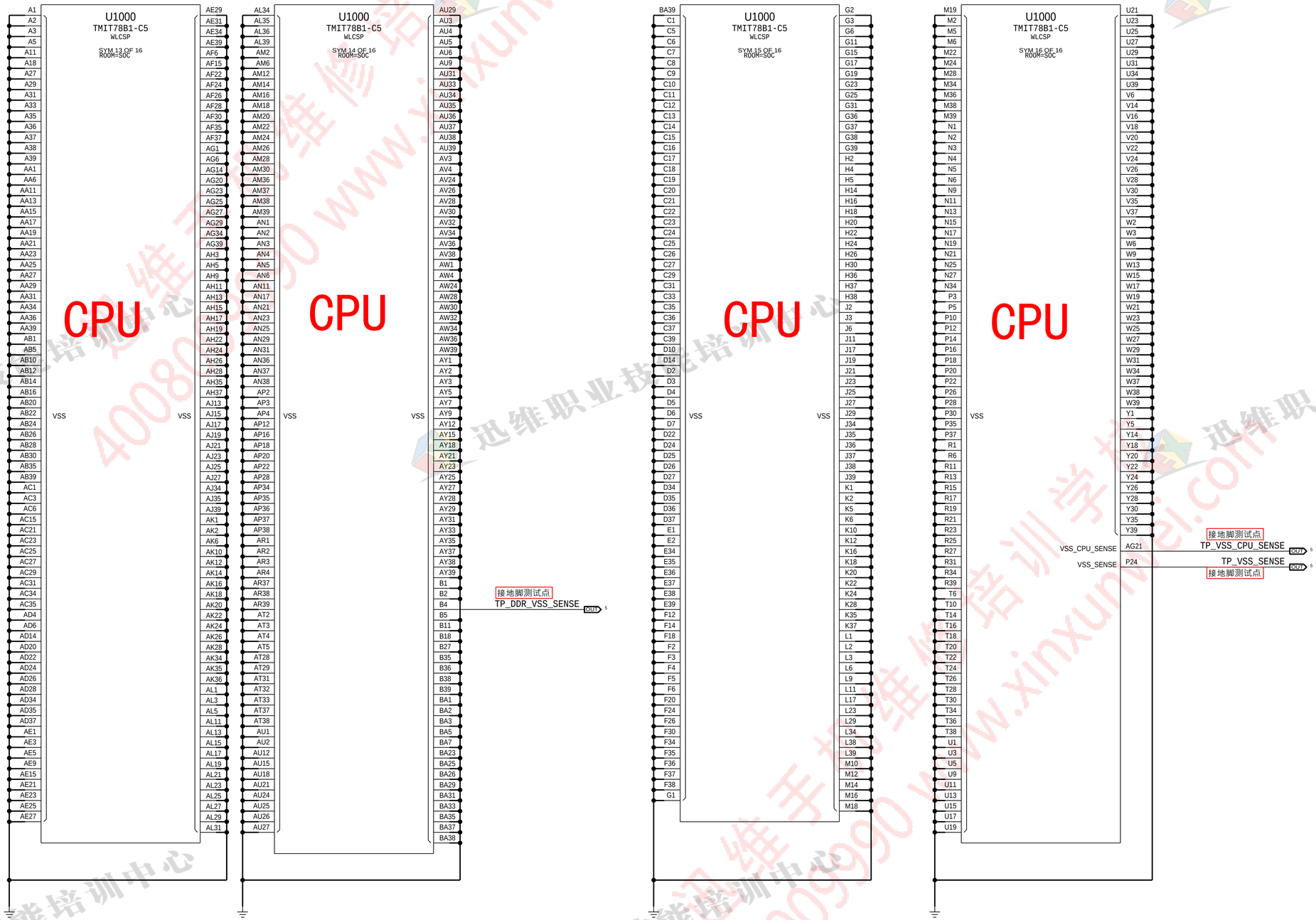

www.xinxunwei.com 400-800-9990

391mA MAX
PP1V8_IO
电源输出的1.8V供电

C2626 4.7UF 20% 4V CER-X5R 0201 ROOM=NAND
C2610 0.1UF 20% 6.3V X5R-CERM 01005 ROOM=NAND
C2629 18UF 20% 6.3V CER-X5R 0402-0.1MM ROOM=NAND
C2630 18UF 20% 6.3V CER-X5R 0402-0.1MM ROOM=NAND
C2641 4.7UF 20% 4V CER-X5R 0201 ROOM=NAND
C2643 4.7UF 20% 4V CER-X5R 0201 ROOM=NAND
C2645 4.7UF 20% 4V CER-X5R 0201 ROOM=NAND
C2647 4.7UF 20% 4V CER-X5R 0201 ROOM=NAND
C2601 22PF 5% 16V CERM 01005 ROOM=NAND
C2611 39PF 5% 16V NP0-C0G 01005 ROOM=NAND
C2617 68PF 5% 16V NP0-C0G 01005 ROOM=NAND
C2623 100PF 5% 16V NP0-C0G 01005 ROOM=NAND
C2612 220PF 5% 10V C0G-CERM 01005 ROOM=NAND

932mA MAX
PP0V9_NAND

C2602 22UF 20% 4V X5R 0402-0.1MM ROOM=NAND
C2605 22UF 20% 4V X5R 0402-0.1MM ROOM=NAND
C2622 4.7UF 20% 4V CER-X5R 0201 ROOM=NAND
C2627 4.7UF 20% 4V CER-X5R 0201 ROOM=NAND
C2640 4.7UF 20% 4V CER-X5R 0201 ROOM=NAND
C2642 4.7UF 20% 4V CER-X5R 0201 ROOM=NAND
C2644 4.7UF 20% 4V CER-X5R 0201 ROOM=NAND
C2646 4.7UF 20% 4V CER-X5R 0201 ROOM=NAND
C2603 22PF 5% 16V CERM 01005 ROOM=NAND
C2606 68PF 5% 16V NP0-C0G 01005 ROOM=NAND
C2609 100PF 5% 16V NP0-C0G 01005 ROOM=NAND
C2614 47PF 5% 16V CERM 01005 ROOM=NAND
C2620 220PF 5% 10V C0G-CERM 01005 ROOM=NAND
C2628 220PF 5% 10V C0G-CERM 01005 ROOM=NAND

d dfasdf

1300mA MAX (1us peak power)
电源输出的硬盘3V供电
PP3V0_NAND

C2613 18UF 20% 6.3V CER-X5R 0402-0.1MM ROOM=NAND
C2616 18UF 20% 6.3V CER-X5R 0402-0.1MM ROOM=NAND
C2619 18UF 20% 6.3V CER-X5R 0402-0.1MM ROOM=NAND
C2621 18UF 20% 6.3V CER-X5R 0402-0.1MM ROOM=NAND
C2649 3.9UF 20% 6.3V CER-X5R 0201 ROOM=NAND
C2650 3.9UF 20% 6.3V CER-X5R 0201 ROOM=NAND
C2651 3.9UF 20% 6.3V CER-X5R 0201 ROOM=NAND
C2652 3.9UF 20% 6.3V CER-X5R 0201 ROOM=NAND
C2615 22PF 5% 16V CERM 01005 ROOM=NAND
C2618 39PF 5% 16V NP0-C0G 01005 ROOM=NAND
C2631 68PF 5% 16V NP0-C0G 01005 ROOM=NAND
C2632 47PF 5% 16V CERM 01005 ROOM=NAND
C2634 100PF 5% 16V NP0-C0G 01005 ROOM=NAND
C2635 220PF 5% 16V C0G-CERM 01005 ROOM=NAND
C2636 220PF 5% 10V C0G-CERM 01005 ROOM=NAND

只是硬盘输出以测试点，掉点可不补
硬盘基准电压测试点
NAND_ANI1_VREF
NAND_ANI0_VREF
硬盘基准电压测试点

U2600
H23Q2T8QK6MES-BC
LGA
BOMOPTION=OMIT_TABLE
CRITICAL

硬盘

CPU发给硬盘的系统时钟
AP_TO_NAND_SYS_CLK — CLK_IN
CPU到硬盘的PCIE总线参考时钟正端
90_PCIE_AP_TO_NAND_REFCLK_P — PCIE_REFCLK_P
CPU到硬盘的PCIE总线参考时钟负端
90_PCIE_AP_TO_NAND_REFCLK_N — PCIE_REFCLK_M
硬盘到CPU的PCIE总线请求运行时钟信号
PCIE_NAND_BI_AP_CLKREQ_L — PCIE_CLKREQ_N
PCIE总线电流设定端
PCIE_NAND_RESREF — PCI_RESREF
CPU到硬盘的PCIE总线数据发射正端
90_PCIE_AP_TO_NAND_TXD_P — PCIE_RX0_P
CPU到硬盘的PCIE总线数据发射负端
90_PCIE_AP_TO_NAND_TXD_N — PCIE_RX0_M
硬盘到CPU的PCIE总线数据接收正端
90_PCIE_NAND_TO_AP_RXD_P — PCIE_TX0_P
硬盘到CPU的PCIE总线数据接收负端
90_PCIE_NAND_TO_AP_RXD_N — PCIE_TX0_M
CPU到硬盘的PCIE总线复位信号
AP_TO_NAND_RESET_L — RESET*
外接电阻校准 信号
NAND_ZQ_C — ZQ_C
NAND_ZQ_N — ZQ_N
MISS_P_DIFFPAIR

R2604 3.01K 1% 1/32W MF 01005 ROOM=NAND
这个电阻不能掉件，腐蚀掉件只能原值或原位置代换

R2600 100 0.1% 1/32W MF 01005 ROOM=NAND
R2601 300 0.1% 1/32 MF 01005 ROOM=NAND
这个电阻不能掉件，腐蚀掉件只能原值或原位置代换

电源到硬盘的电池低电压启动模式
PMU_TO_NAND_LOW_BATT_BOOT_L — EXT_D0/BOOT0
CPU发给硬盘的启动信号
AP_TO_NAND_FW_STRAP — EXT_D1/BOOT1
CPU到硬盘的启动配置
SPI_AP_TO_S4E_SCLK_BOOT_CONFIG0 — EXT_D2/BOOT2/SPINAND_SCLK
SPI_S4E_TO_AP_MISO_BOOT_CONFIG2 — EXT_D3/SWD_UID0/SPINAND_MISO
SPI_AP_TO_S4E_MOSI_BOOT_CONFIG1 — EXT_D5/SWD_UID1/SPINAND_MOSI
电源发给CPU和硬盘的激活信号
SYSTEM_ALIVE — EXT_NCE/PERST*
CPU到硬盘的PCIE总线复位信号
PCIE_AP_TO_NAND_RESET_L — EXT_NRE/JTAG_TMS
CPU到硬盘的SWD总线数据
SWD_AP_BI_NAND_SWDIO — EXT_NWE/JTAG_TCK
CPU到硬盘的SWD总线时钟
SWD_AOP_TO_MANY_SWCLK — EXT_RNB/JTAG_TDO
EXT_D4/UART_RX NC
EXT_D6/UART_TX NC
EXT_D7/SPF NC
EXT_CLE/JTAG_TDI NC
EXT_ALE/JTAG_SEL
DROOP_N
WP_N — PP1V8_IO
电源输出的1.8V供电
PP1V8_IO
MAKE_BASE=TRUE

NC: N6, M9, J6, N8, J8, L2, G12, J4, G6, G8, L6, L8, R6, R8, E2, E10, J2, K9, N2, T5, P9, D3, E12, G4, L12, R2, R4, F3
VSS: A2, A4, A6, A8, A10, A12, B1, B13, C2, C12, D1, D11, D13, F1, F5, F7, F9, F11, F13, H1, H3, H5, H9, H11, H13, J10, K1, K5, K7, K13, L10, M1, M5, M7, M13, N4, N10, P1, P3, P7, P11, P13, R10, T1, T7, T9, T13, U2, U4, U6, U8, U10, U12

www.xinxunwei.com 400-800-9990

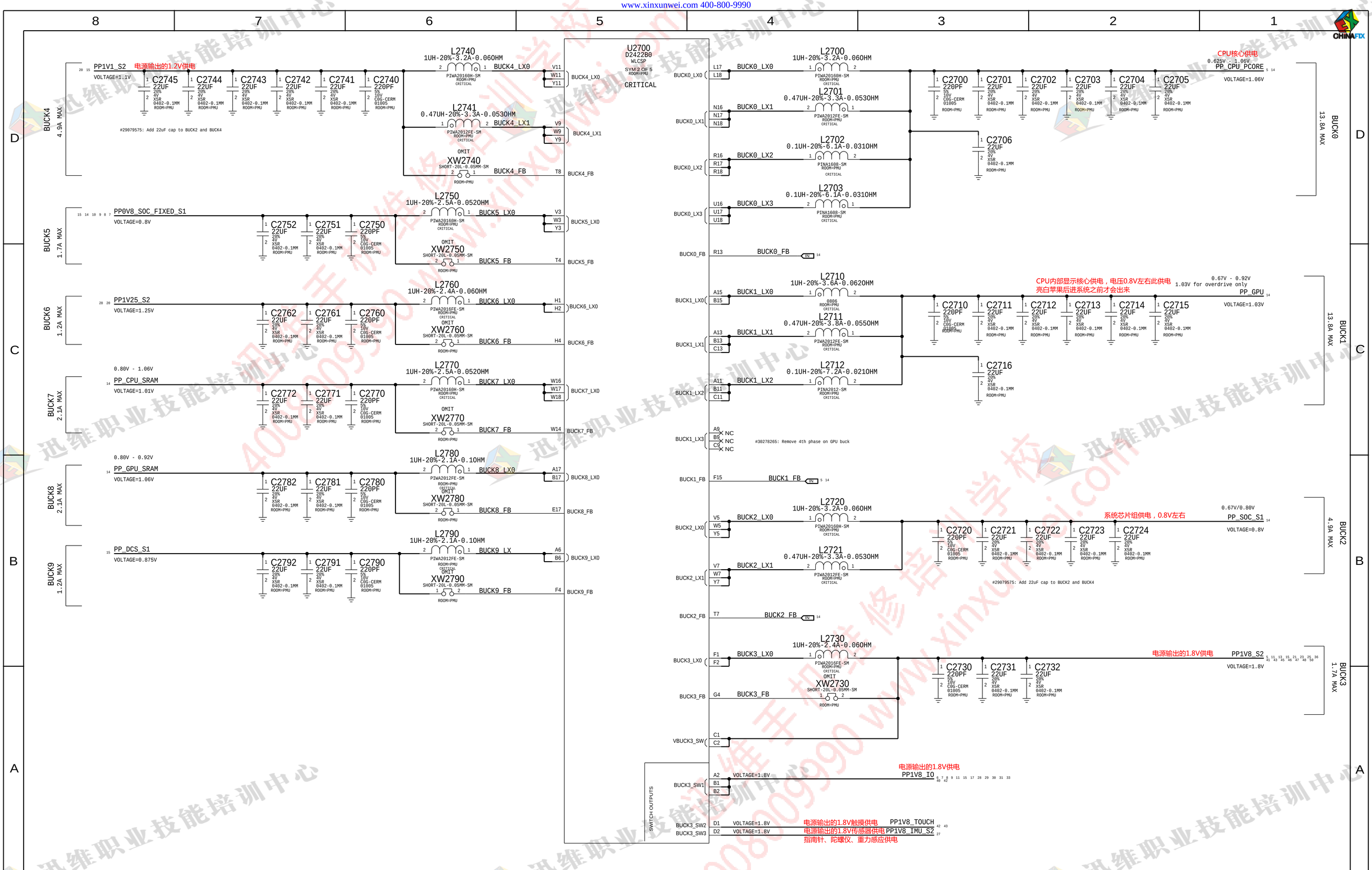

www.xinxunwei.com 400-800-9990

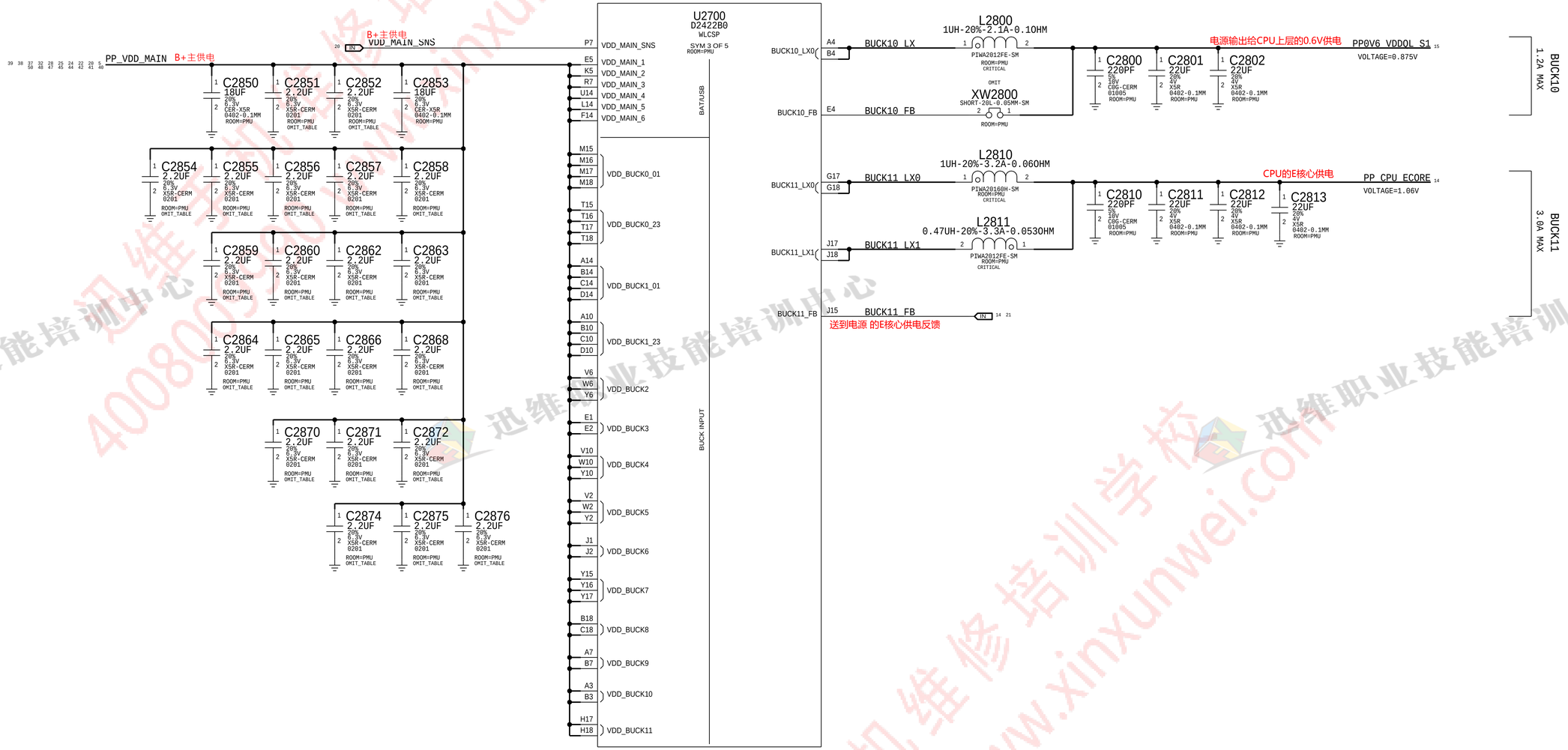

www.xinxunwei.com 400-800-9990

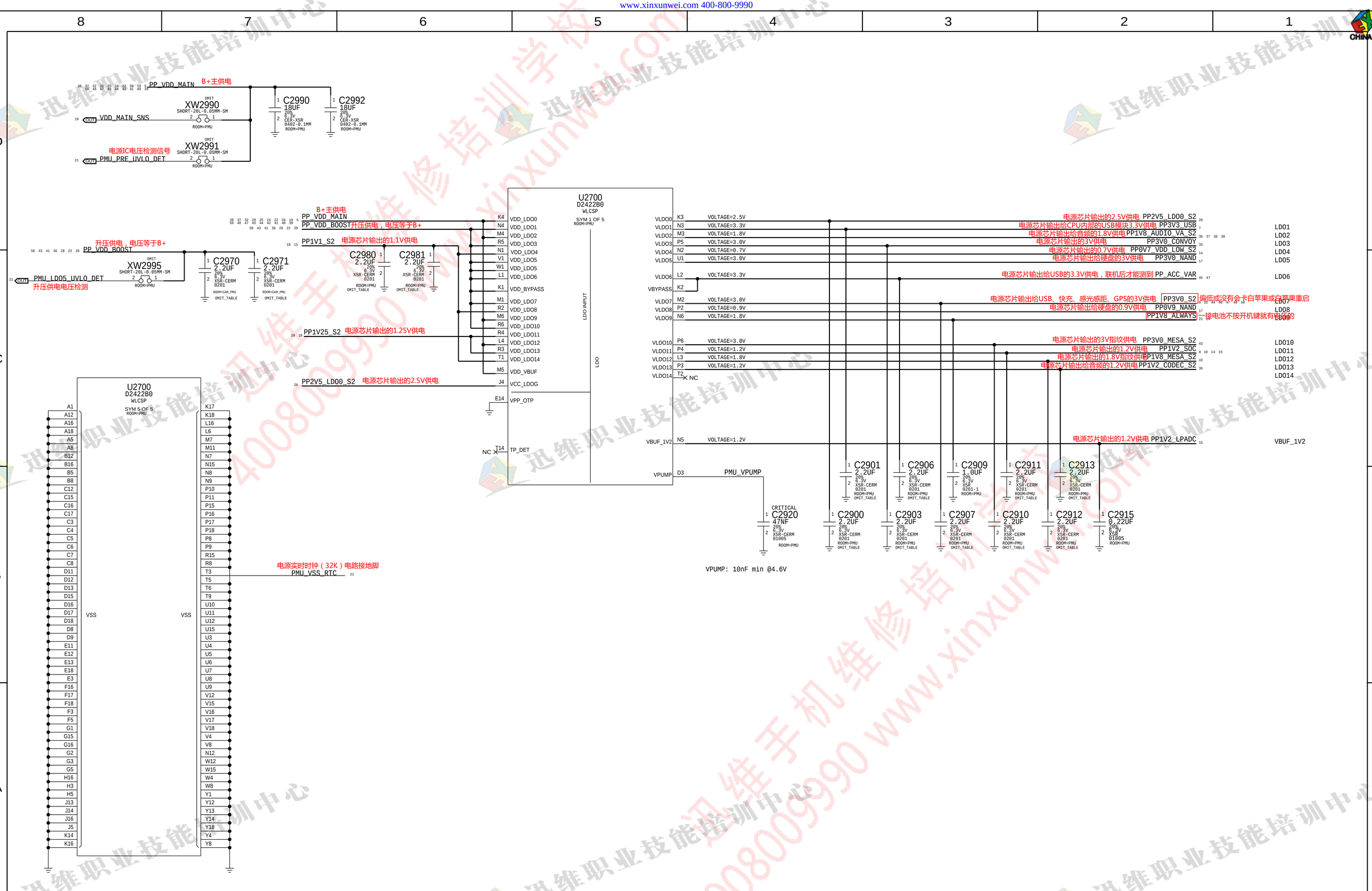

www.xinxunwei.com 400-800-9990

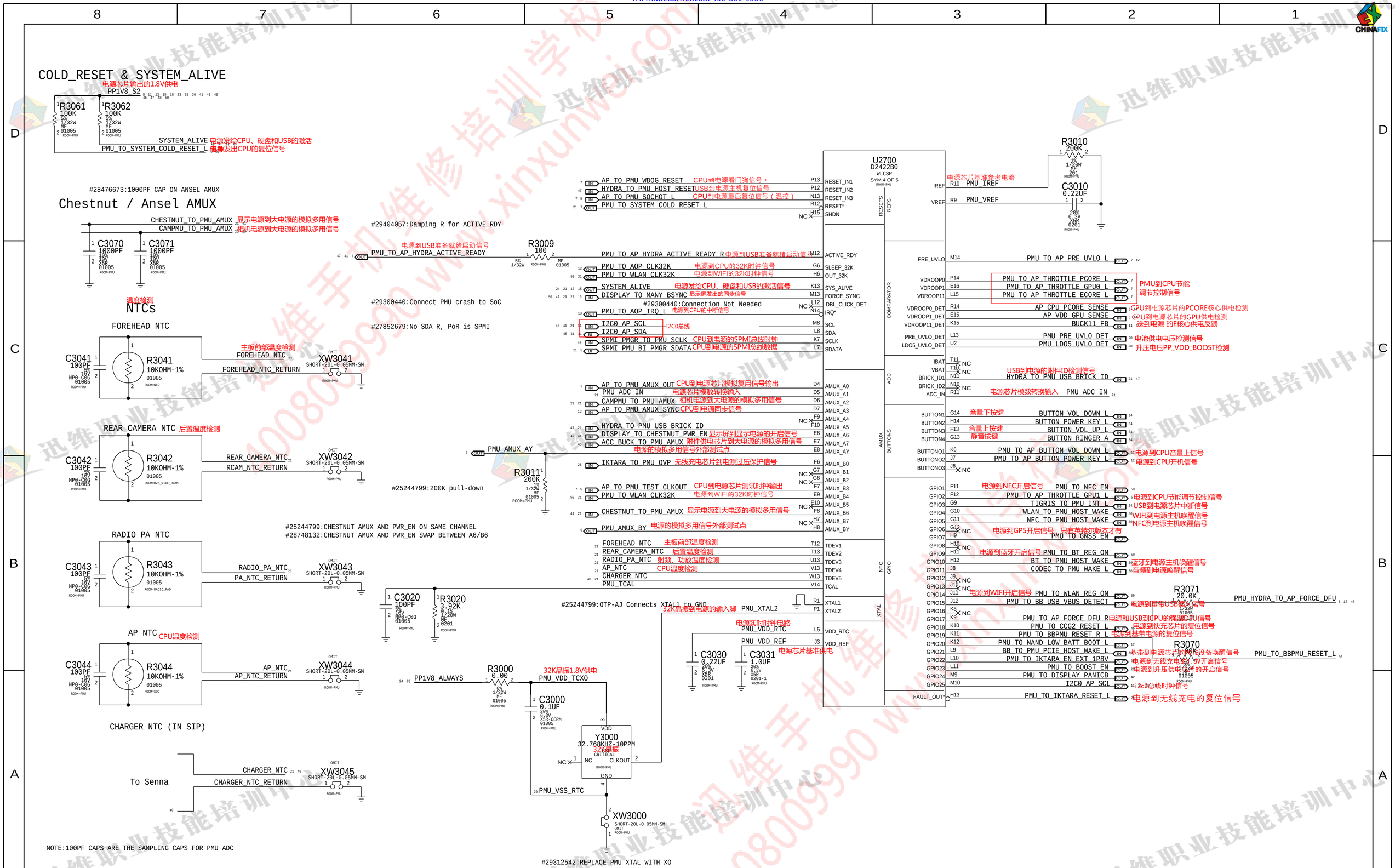

www.xinxunwei.com 400-800-9990

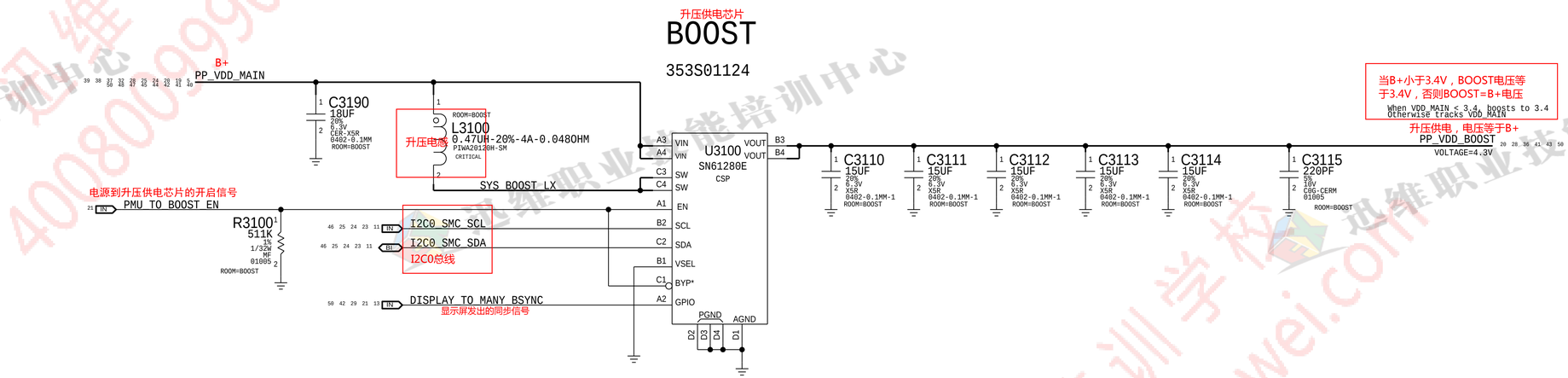

www.xinxunwei.com 400-800-9990

电池接口

Battery Connector

THIS ONE ON MLB ---> 516S00232

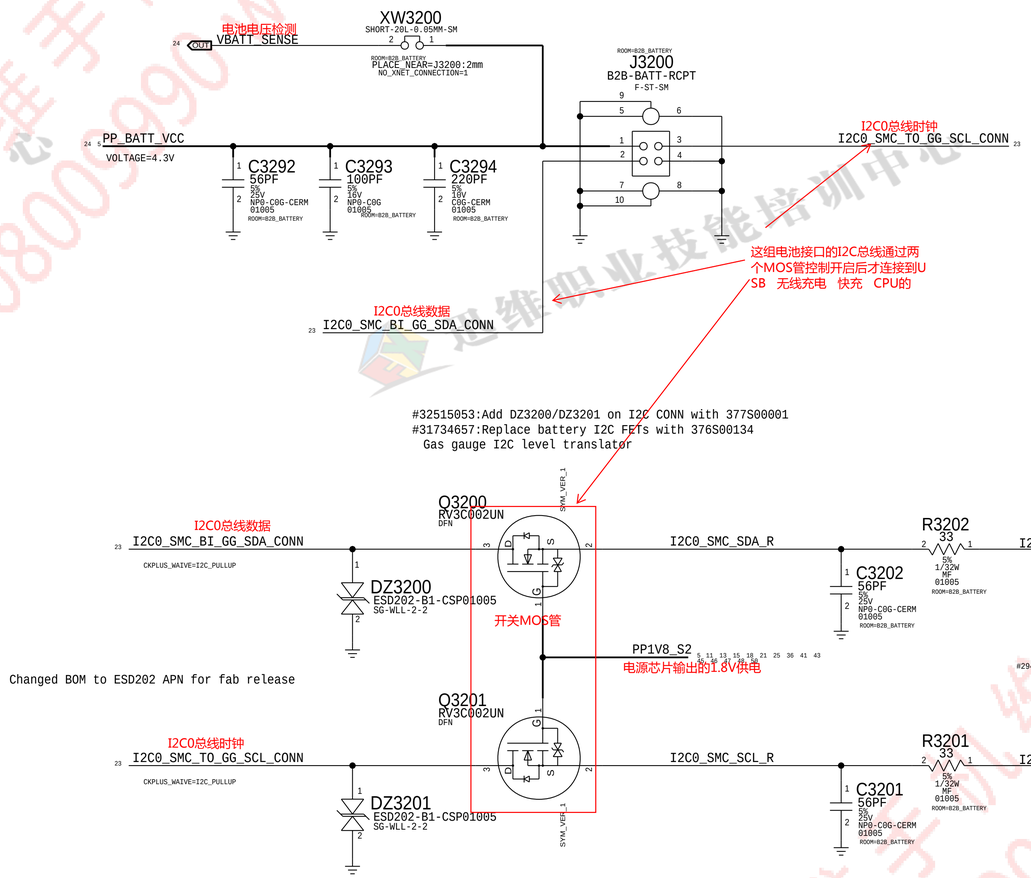

www.xinxunwei.com 400-800-9990

Tigris 2

APN:343S00170

#29546692:Move DZ3300 to PMID1
Additional Cap for D21/D211 MLB
C3318 is only on D21x

TIGRIS_PMID1 充电芯片自身降压产生电路外部滤波

DZ3300 BZT52C20LP DFN1062

C3318 2.2UF 20% 25V X5R 0402-4 ROOM=CHARGER
C3310 4.7UF 20% 25V X5R 0603 ROOM=CHARGER
C3315 220PF 5% 25V C0G 01005 ROOM=CHARGER
C3316 220PF 5% 25V C0G 01005 ROOM=CHARGER
NOSTUFF C3317 220PF 5% 25V C0G 01005 ROOM=CHARGER

#29277790:Nostuff C3317/C3327
#26845160:Charge Sharing on PMID caps
#31097491:Charge C3310/C3320 to ZRB

R3311 50K 1% 1/32W MF 01005 ROOM=CHARGER
C3311 4.7UF 20% 16V X5R 0402 ROOM=CHARGER
C3312 4.7UF 20% 16V X5R 0402 ROOM=CHARGER
C3313 4.7UF 20% 16V X5R 0402 ROOM=CHARGER

TIGRIS_PMID2 充电芯片自身降压产生电路外部滤波

C3320 4.7UF 20% 25V X5R 0603 ROOM=CHARGER
C3325 220PF 5% 25V C0G 01005 ROOM=CHARGER
C3326 220PF 5% 25V C0G 01005 ROOM=CHARGER
NOSTUFF C3327 220PF 5% 25V C0G 01005 ROOM=CHARGER

PP_VBUS1_E75 尾插到充电芯片的充电电压

#31097491:Change C3301/C3420 to ZRB

C3301 2.2UF 20% 25V X5R 0402-4 OMIT_TABLE ROOM=CHARGER
C3302 220PF 5% 25V C0G 01005 ROOM=CHARGER
C3303 220PF 5% 25V C0G 01005 ROOM=CHARGER

PP_VBUS2_IKTARA 无线充电到充电芯片的充电电压

C3305 1UF 10% 25V X5R 402 ROOM=CHARGER
C3306 220PF 5% 25V C0G 01005 ROOM=CHARGER

PP1V8_ALWAYS

R3330 100K 5% 1/32W MF 01005 ROOM=CHARGER

TIGRIS_TO_PMU_INT_L

R3331 100 1% 1/32W MF 01005 ROOM=CHARGER

USB_VBUS_DETECT

R3332 30.1K 1% 1/32W MF 01005 ROOM=CHARGER

I2C0_SMC_SDA I2C0总线
I2C0_SMC_SCL
SYSTEM_ALIVE 电源发给CPU和充电芯片的激活信号
HYDRA_TO_TIGRIS_VBUS1_VALID_L USB到充电芯片的过流检测（开启信号）
TIGRIS_TO_PMU_INT_R_L 充电芯片到电源的中断信号
TIGRIS_VBUS_DETECT USB插入检测脚

U3300 SN2501A1 WCSP ROOM=CHARGER CRITICAL 充电芯片

PMID1 A6 B6 C6 D6 E6
PMID2 F6 G6 H6
VBUS1 A5 B5 C5 D5 E5
VBUS2 F5 G5 H5
SDA F3
SCL G2
SYS_ALIVE F4
VBUS1_VALID* B4
VBUS2_VALID* B3
INT* E3
VBUS1_DET C4
TEST D4
NTC E4
VDD_MAIN A2 B2 C2 D2 E2 F2
VDD_MAIN5 F2
LDO H3
BOOT H4
BUCK_SW A7 B7 C7 D7 E7 F7 G7 H7
BATT A1 B1 C1 D1 E1
BATT_SNS F1
ACT_DIODE A3
HDQ_HOST G3
HDQ_GAUGE G4
AUX1 A4
NC0 D3
NC1 G1
NC2 H1
NC3 H2
GND A8 C8 D8 E8 F8 G8 H8
AGND B8

#29745777:Conn VDD_MAIN5 to PP_VDD_MAIN

C3390 15UF 20% 6.3V CERM 0402-0.1MM ROOM=CHARGER
C3391 15UF 20% 6.3V CERM 0402-0.1MM ROOM=CHARGER

B+ PP_VDD_MAIN

充电芯片自身降压产生电路外部滤波

TIGRIS_LDO

C3360 220PF 5% 10V C0G-CERM 01005 ROOM=CHARGER
C3361 3.9UF 20% 6.3V CER-X5R 0201 ROOM=CHARGER

138S00140/138S00141/138S00142 are alts
#29536225:4UF for Better Derating
#30208688:Update C3342/C3360/C3294 to 131S00053

TIGRIS_BOOT

C3340 0.047UF 10% 16V X5R 0201 ROOM=CHARGER NO_XNET_CONNECTION

TIGRIS_LX

APN:152S00683 (0.47UH-20%-7.2A-0.028OHM)
Inductor in Niki SIP
升压电感
集成在M5500里面

C3341 220PF 5% 10V C0G-CERM 01005 ROOM=CHARGER
C3342 220PF 5% 10V C0G-CERM 01005 ROOM=CHARGER
C3343 330PF 10% 16V CER-X7R 01005 ROOM=CHARGER

CRITICAL Q3350 CSD68841W BGA ROOM=CHARGER
充电管

电池供电

VBATT_SENSE 电池电压检测
TIGRIS_ACTIVE_DIODE 充电管开关信号

PP_BATT_VCC

C3353 220PF 5% 10V C0G-CERM 01005 ROOM=CHARGER
C3350 330PF 10% 16V CER-X7R 01005 ROOM=CHARGER
C3351 2.2UF 20% 6.3V X5R-CERM 0201 ROOM=CHARGER OMIT_TABLE
C3352 2.2UF 20% 6.3V X5R-CERM 0201 ROOM=CHARGER OMIT_TABLE

#29536266:10ohm between AUX1 and P_IN

PP_VAR_USB_RVP_TIGRIS_R

R3335 10 5% 1/32W MF 01005 ROOM=CHARGER

USB3V供电
PP_VAR_USB_RVP

NOSTUFF R3350 100K 5% 1/32W MF 01005 ROOM=CHARGER

Grounded for thermals

BATTERY NTC

C3370 220PF 5% 10V C0G-CERM 01005 ROOM=CHARGER
电池温控热敏电阻
R3370 10KOHM-1% 01005 ROOM=B2B_BATTERY

BATTERY_NTC
BATTERY_NTC_RETURN

OMIT XW3370 SHORT-20L-0.05MM-SM ROOM=CHARGER

www.xinxunwei.com 400-800-9990

Iktara

Iktara Debug

PP3403 P2MM-NSM SM ROOM=TEST — IKTARA_GPIO3

PP3404 P2MM-NSM SM ROOM=TEST — IKTARA_GPIO4

PP3405 P2MM-NSM SM ROOM=TEST — IKTARA_TO_SMC_INT 无线充电芯片到CPU的中断信号

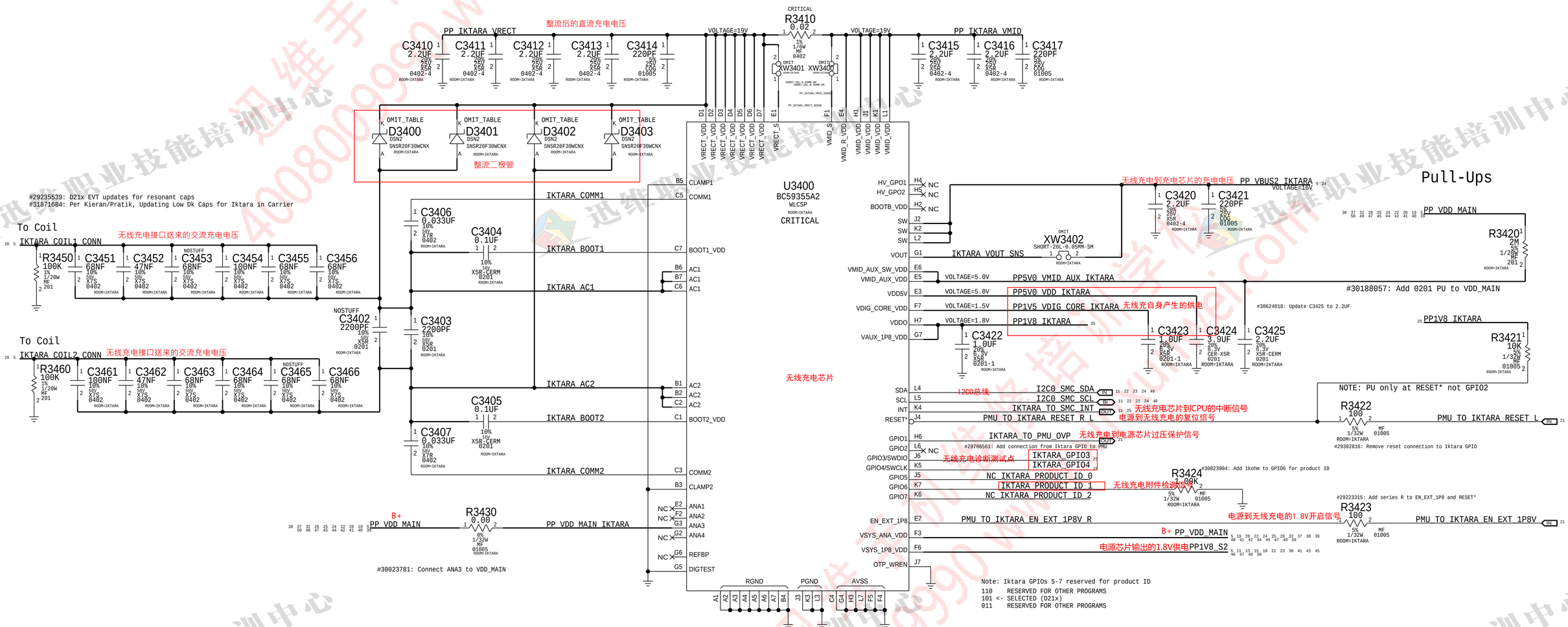

www.xinxunwei.com 400-800-9990

Cyclone connector

THIS ONE ON MLB ---> 516S00311

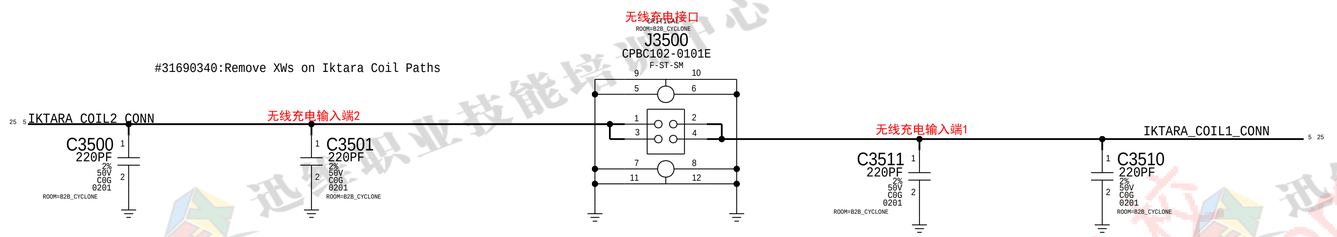

www.xinxunwei.com 400-800-9990

Graphite - Accel & Gyro

APN: 338S00304 (A1)

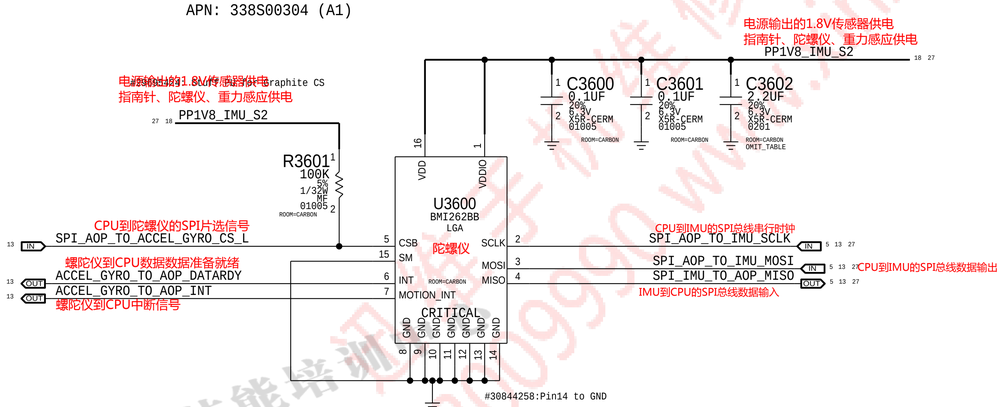

Magnesium - Compass

APN:338S00084

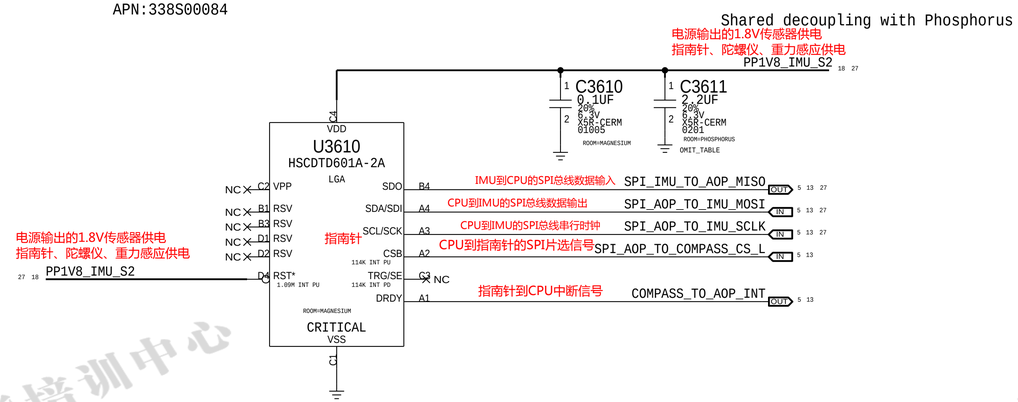

North Speaker Compass Compensation Coil

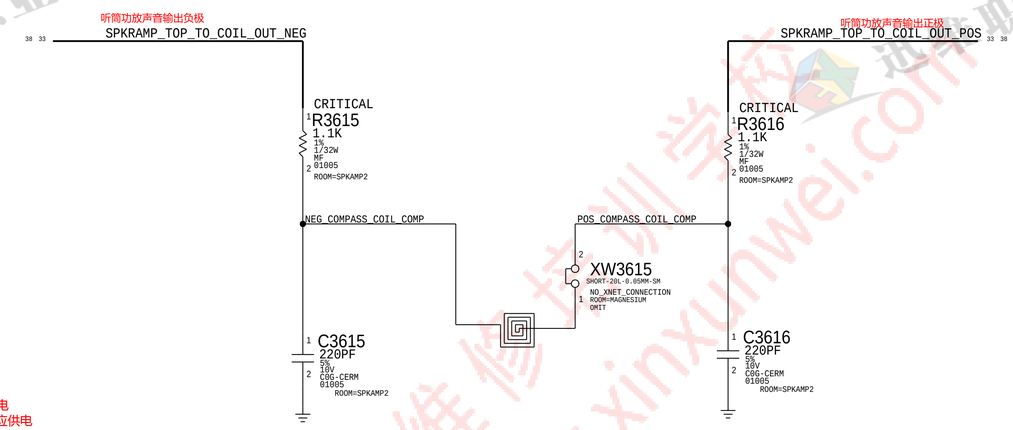

Phosphorus

APN:338S00334

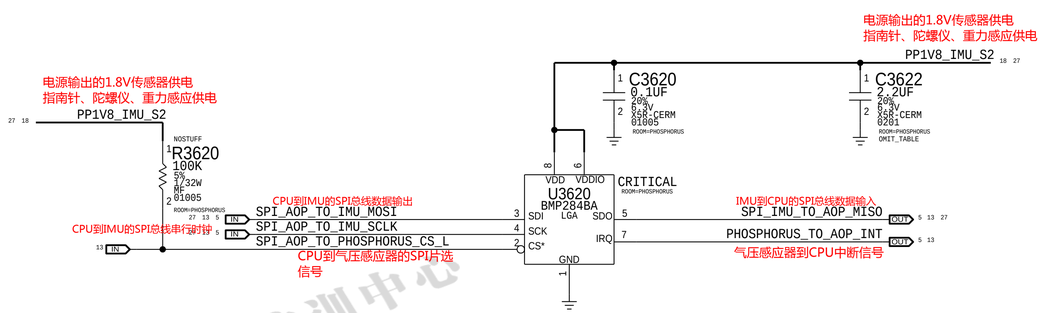

www.xinxunwei.com 400-800-9990

Camera PMU

相机电源

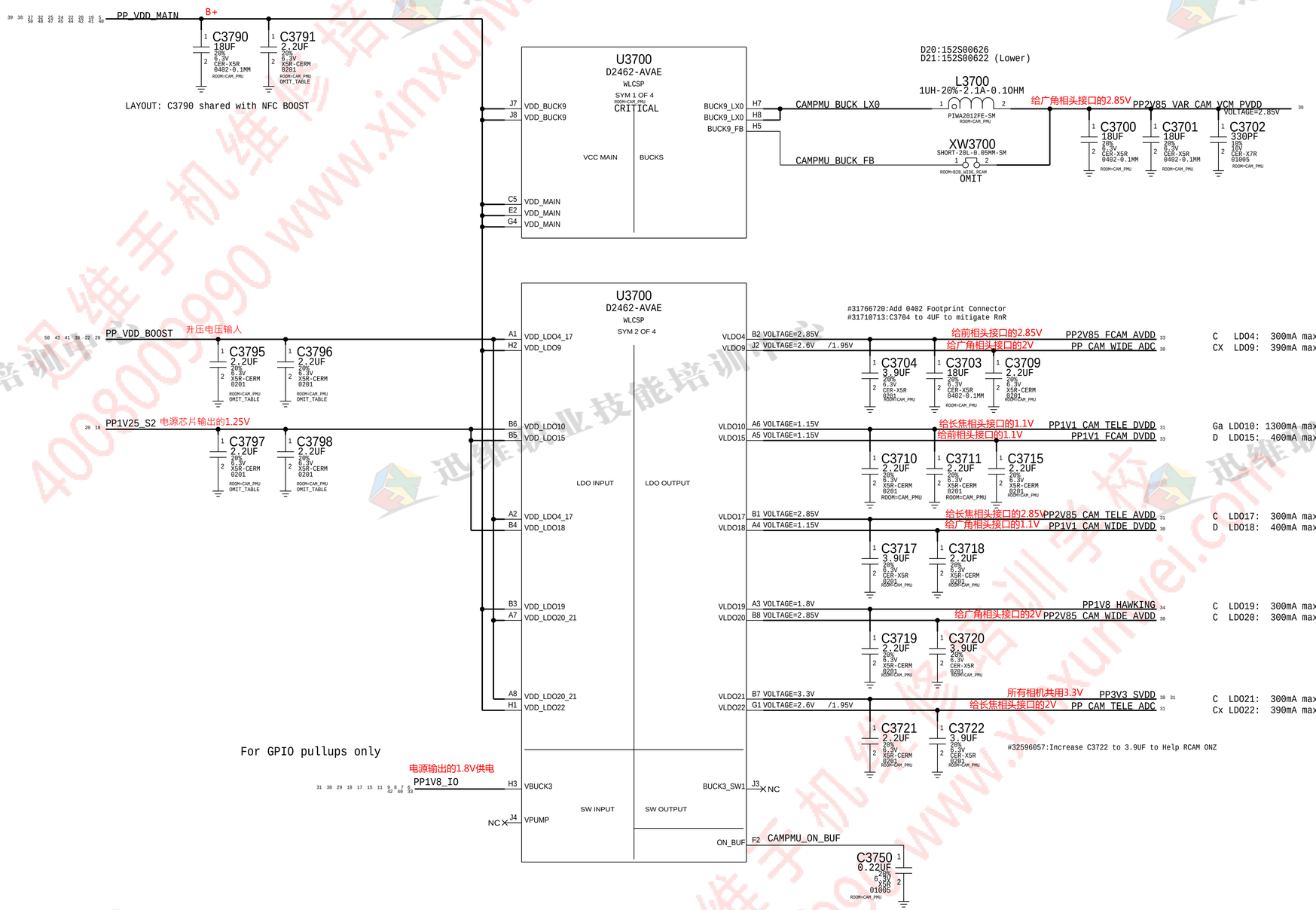

www.xinxunwei.com 400-800-9990

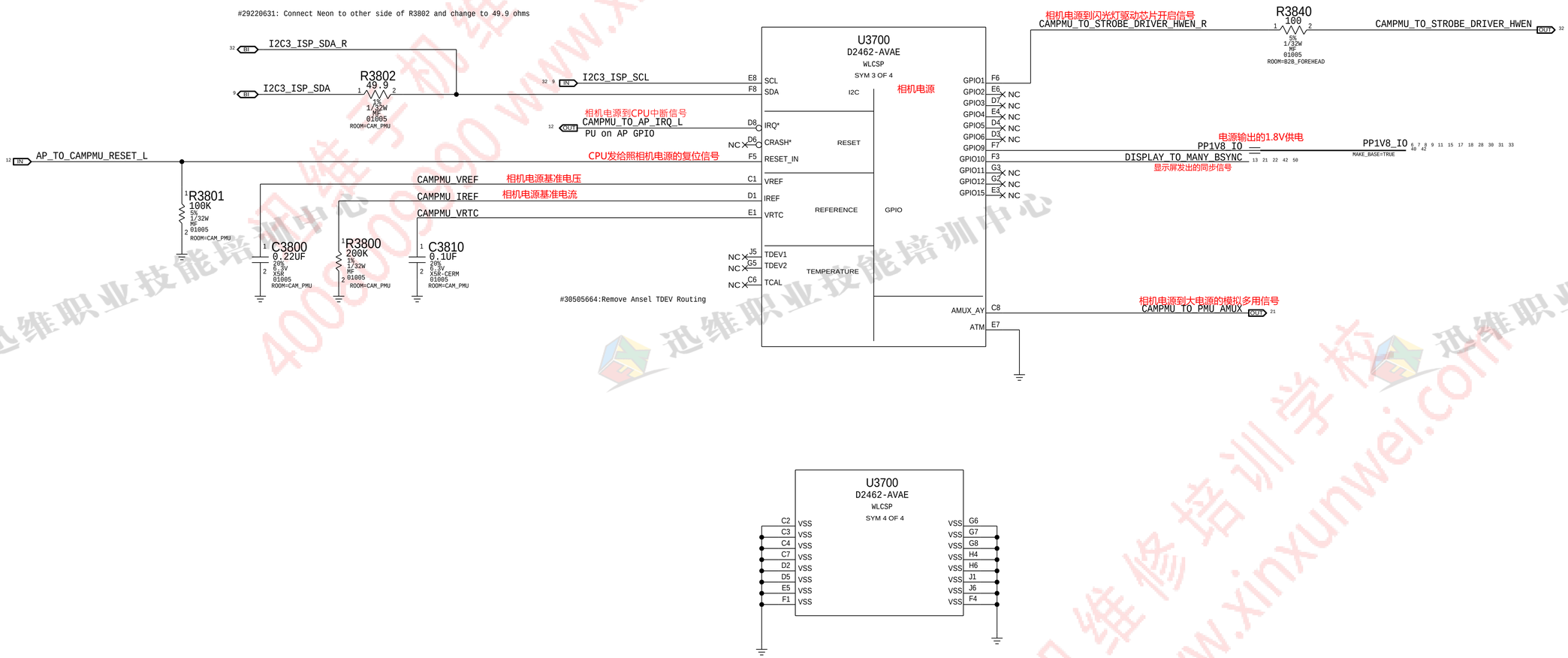

www.xinxunwei.com 400-800-9990

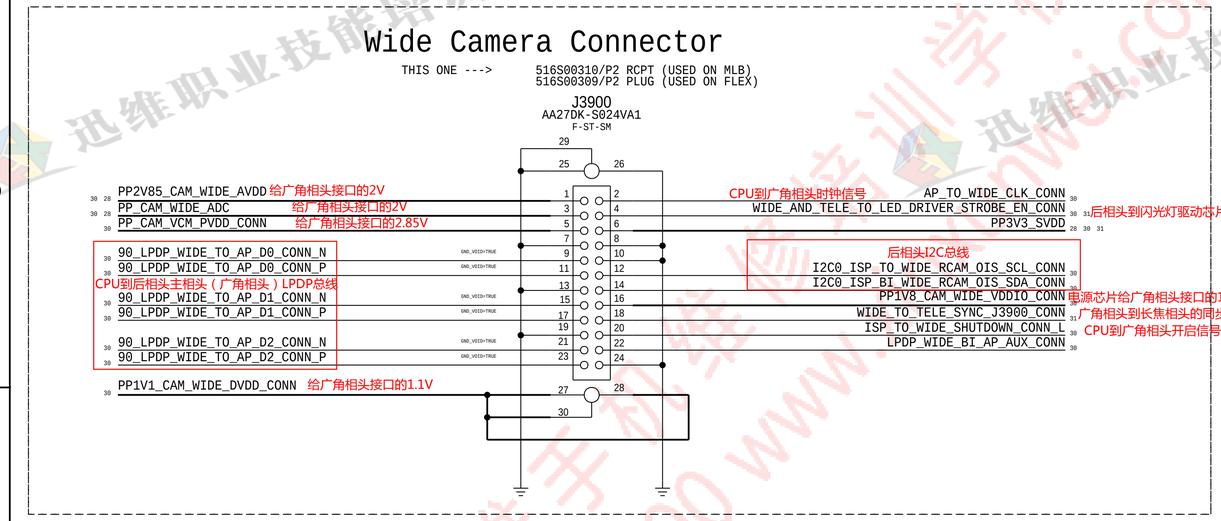

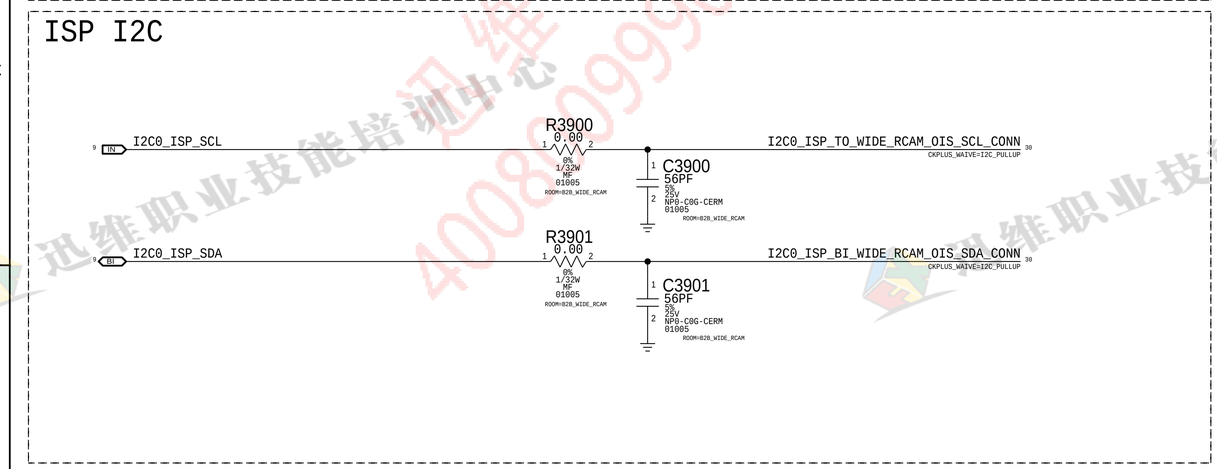

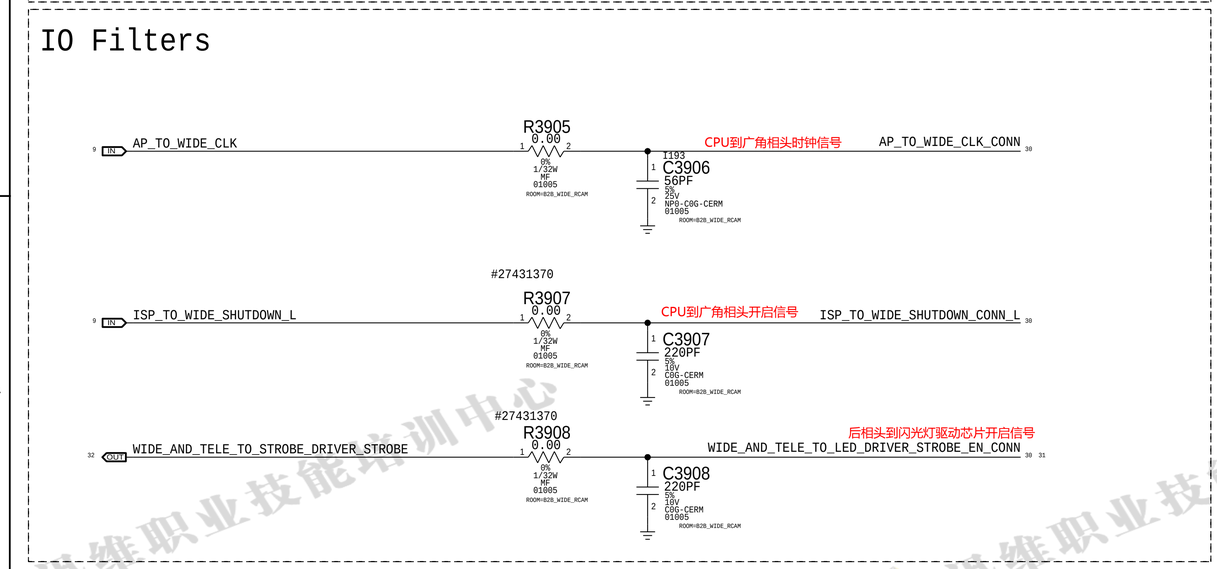

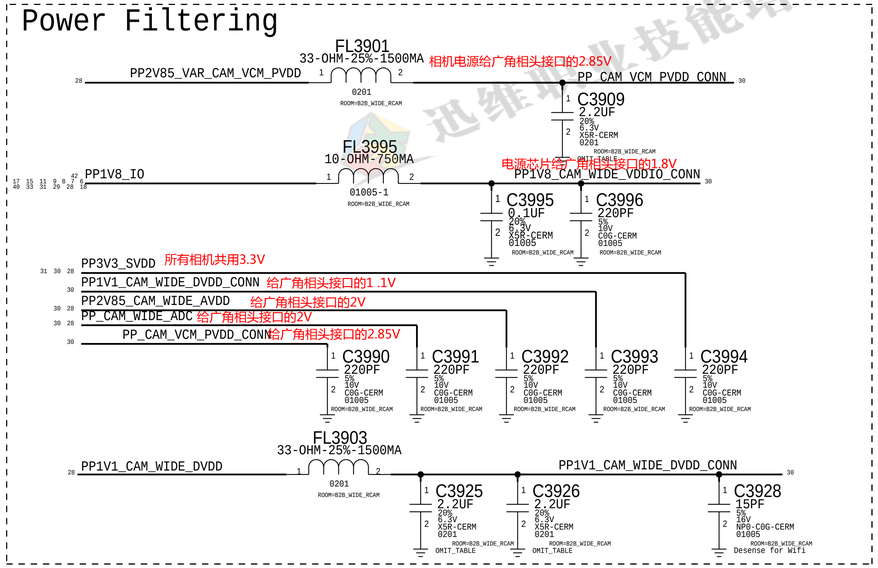

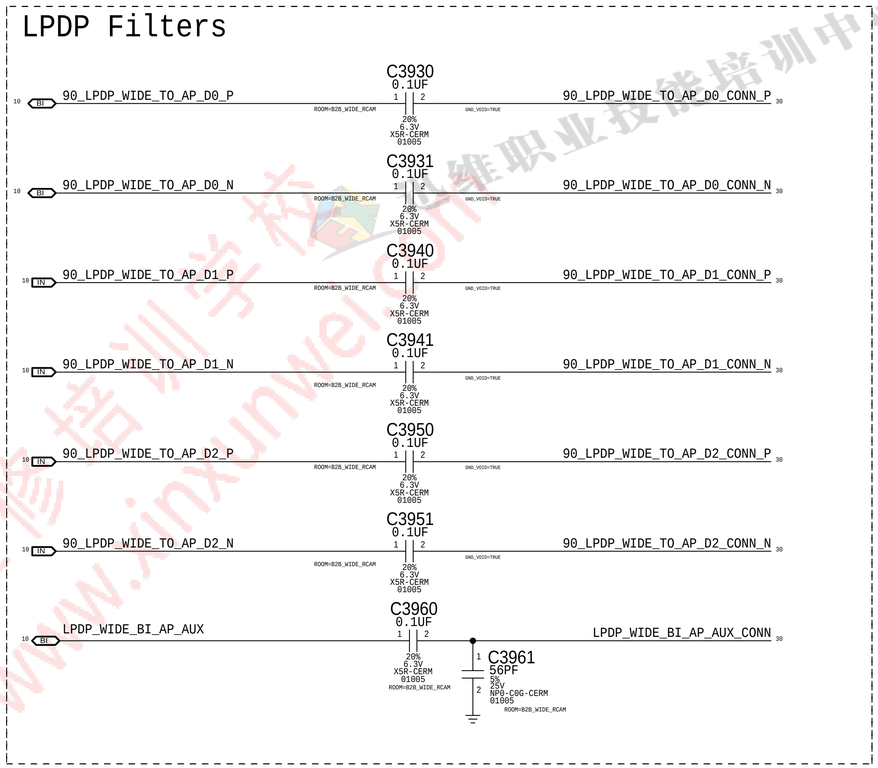

www.xinxunwei.com 400-800-9990

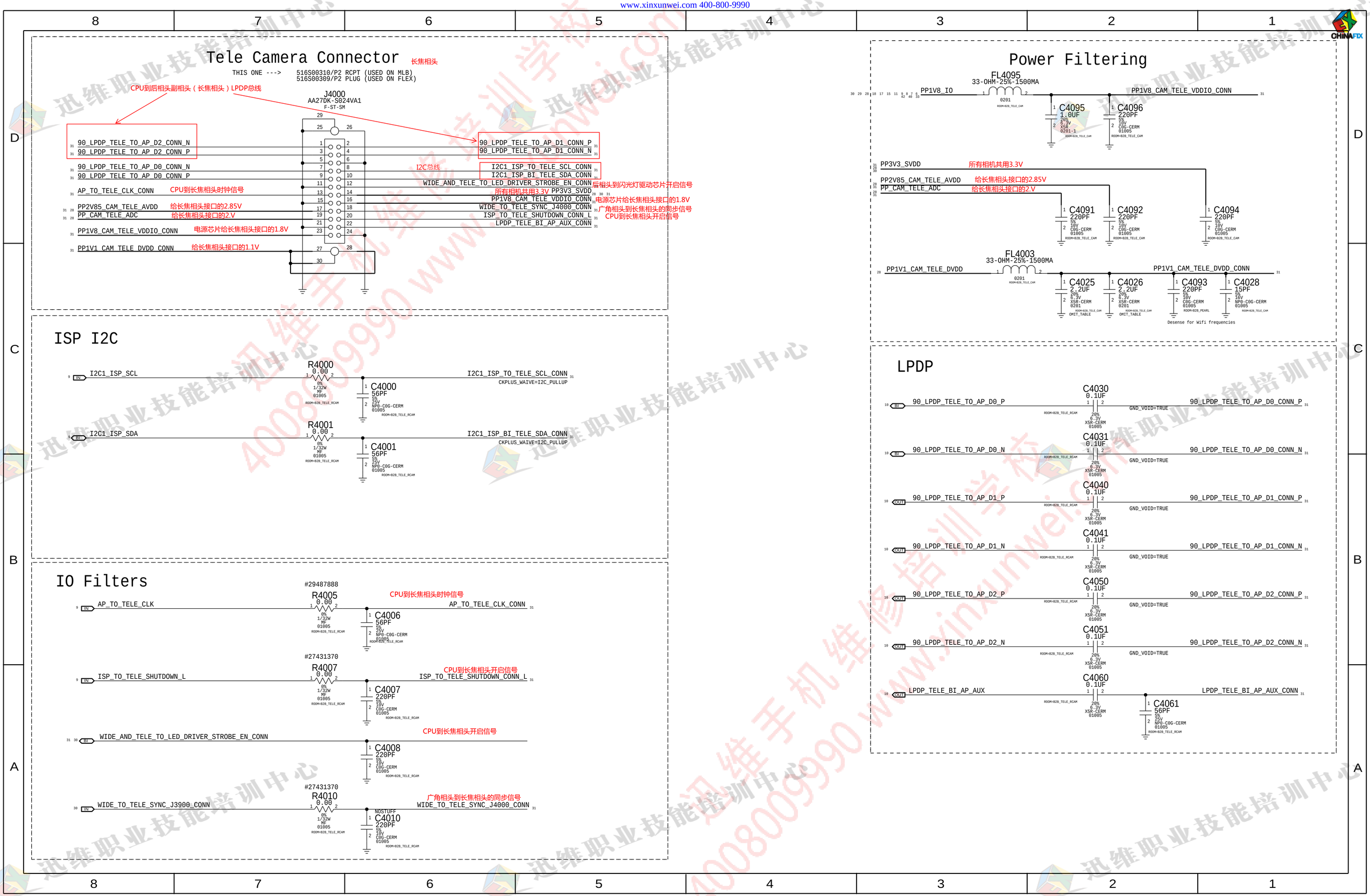

www.xinxunwei.com 400-800-9990

LED STROBE DRIVERS (NEON)

闪光灯驱动芯片

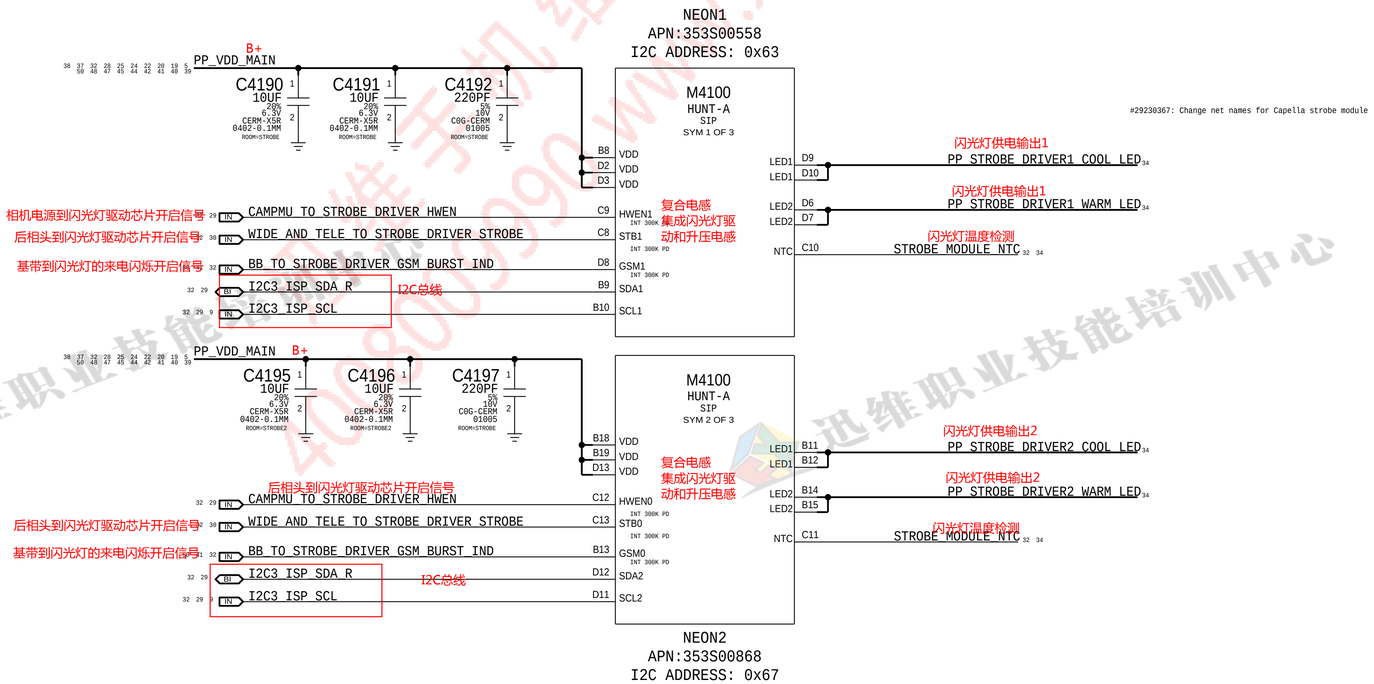

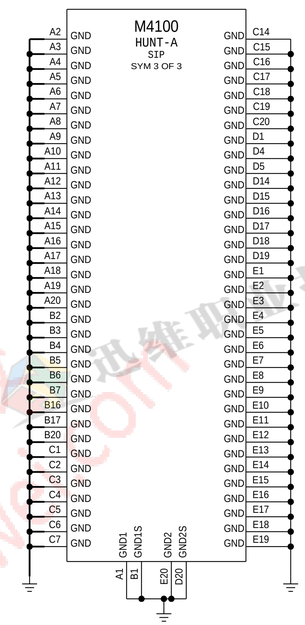

www.xinxunwei.com 400-800-9990

FCAM POWER

PP1V8_IO — FL4200 1500HM-25%-200MA-0.7DCR (01005, ROOM=B2B_FOREHEAD) — PP1V8_FCAM_IO_CONN
- C4200 0.1UF 20% 6.3V X5R-CERM 01005 ROOM=B2B_FOREHEAD
- C4201 220PF 5% 10V C0G-CERM 01005 ROOM=B2B_FOREHEAD

给前相头接口的1.1V

PP1V1_FCAM_DVDD — FL4210 33-OHM-25%-1500MA (0201, ROOM=B2B_FOREHEAD) — PP1V1_FCAM_DVDD_CONN
- C4210 0.1UF 20% 6.3V X5R-CERM 01005 ROOM=B2B_FOREHEAD
- C4211 220PF 5% 10V C0G-CERM 01005 ROOM=B2B_FOREHEAD

PP2V85_FCAM_AVDD — FL4220 10-OHM-750MA (01005-1, ROOM=B2B_FOREHEAD) — PP2V85_FCAM_AVDD_CONN
- C4220 0.1UF 20% 6.3V X5R-CERM 01005 ROOM=B2B_FOREHEAD
- C4221 220PF 5% 10V C0G-CERM 01005 ROOM=B2B_FOREHEAD

PROX + ALS + CONVOY POWER

PP3V0_CONVOY — FL4250 1500HM-25%-200MA-0.7DCR (01005, ROOM=B2B_FOREHEAD) — PP3V0_CONVOY_CONN
- C4250 2.2UF 20% 6.3V X5R-CERM 0201 ROOM=B2B_FOREHEAD OMIT_TABLE
- C4251 220PF 5% 10V C0G-CERM 01005 ROOM=B2B_FOREHEAD

PP3V0_S2 — FL4260 10-OHM-750MA (01005-1, ROOM=B2B_FOREHEAD) — PP3V0_PROX_ALS_CONN
- C4261 2.2UF 20% 6.3V X5R-CERM 0201 ROOM=B2B_FOREHEAD OMIT_TABLE
- C4262 220PF 5% 10V C0G-CERM 01005 ROOM=B2B_FOREHEAD

#28225348: Change FL4260 to low-DCR part

FOREHEAD CONNECTOR

APN: 516S00146

前置相头接口

J4200 245858036201829 F-ST-SM (ROOM=B2B_FOREHEAD, CRITICAL)

Net	Function
PP2V85_FCAM_AVDD_CONN	相机电源给前相头接口的2.85V
PP1V8_FCAM_IO_CONN	
ISP_TO_FCAM_SHUTDOWN_CONN_L	CPU到前置相头开启信号
AP_TO_FCAM_CLK_CONN	CPU到长焦相头时钟信号
I2C2_ISP_TO_FCAM_SCL_CONN	I2C总线
I2C2_AP_BI_CONVOY_SDA_CONN	
PDM_SPKRAMP_TOP_TO_CONVOY_CLK_CONN	
PDM_CONVOY_TO_SPKRAMP_TOP_DATA_CONN	
PROX_BI_AOP_INT_PWM_CONN_L	感距到CPU的中断信号
COIL_TO_SPKRAMP_TOP_VSENSE_CONN_P	听筒功放到听筒的驱动电压检测
COIL_TO_SPKRAMP_TOP_VSENSE_CONN_N	听筒功放到听筒的驱动信号负极
SPKRAMP_TOP_TO_COIL_OUT_NEG	
I2C0_AOP_TO_PROX_ALS_SCL_CONN	CPU到感光感距的I2C总线
PP_CODEC_TO_FRONTMIC3_BIAS_CONN	前置麦克风偏压
FRONTMIC3_TO_CODEC_AIN3_CONN_P	前置麦克风信号
FRONTMIC3_TO_CODEC_BIAS_FILT_RET	前置麦克风偏压

Net	Function
90 MIPI FCAM TO AP DATA0 P	前相头到CPU的MIPI总线
90 MIPI FCAM TO AP DATA0 N	
90 MIPI FCAM TO AP CLK P	
90 MIPI FCAM TO AP CLK N	
90 MIPI FCAM TO AP DATA1 P	
90 MIPI FCAM TO AP DATA1 N	
PP1V1_FCAM_DVDD_CONN	给前相头接口的1.1V
I2C2_ISP_BI_FCAM_SDA_CONN	I2C总线
I2C2_AP_TO_CONVOY_SCL_CONN	
PP3V0_CONVOY_CONN	3V供电
I2C0_AOP_BI_PROX_ALS_SDA_CONN	CPU到感光感距的I2C总线
SPKRAMP_TOP_TO_COIL_OUT_POS	听筒功放到听筒的驱动信号正极
ALS_TO_AOP_INT_CONN_L	感光到CPU的中断信号
PP3V0_PROX_ALS_CONN	电源到感光感距的3V供电
FRONTMIC3_TO_CODEC_AIN3_CONN_N	前置麦克风信号

XW4200 (ROOM=B2B_FOREHEAD, SHORT-20L-0.05MM-SM)

FCAM I/O

#29487888

AP_TO_FCAM_CLK — R4230 0.00 (0% 1/32W MF 01005 ROOM=B2B_FOREHEAD) — AP_TO_FCAM_CLK_CONN (CPU到长焦相头时钟信号)
- C4230 56PF 5% 25V NP0-C0G-CERM 01005 ROOM=B2B_FOREHEAD

#27431370

ISP_TO_FCAM_SHUTDOWN_L — R4232 0.00 (0% 1/32W MF 01005 ROOM=B2B_FOREHEAD) — ISP_TO_FCAM_SHUTDOWN_CONN_L (CPU到前置相头开启信号)
- C4232 220PF 5% 10V C0G-CERM 01005 ROOM=B2B_FOREHEAD

I2C2_ISP_SCL — R4234 0.00 (0% 1/32W MF 01005 ROOM=B2B_FOREHEAD) — I2C2_ISP_TO_FCAM_SCL_CONN (CKPLUS_WAIVE=I2C_PULLUP)
- C4234 56PF 5% 25V NP0-C0G-CERM 01005 ROOM=B2B_FOREHEAD

I2C2_ISP_SDA — R4236 0.00 (0% 1/32W MF 01005 ROOM=B2B_FOREHEAD) — I2C2_ISP_BI_FCAM_SDA_CONN (CKPLUS_WAIVE=I2C_PULLUP)
- C4236 56PF 5% 25V NP0-C0G-CERM 01005 ROOM=B2B_FOREHEAD

NORTH SPEAKER

SPKRAMP_TOP_TO_COIL_OUT_POS
- C4284 220PF 5% 10V C0G-CERM 01005 ROOM=B2B_FOREHEAD

SPKRAMP_TOP_TO_COIL_OUT_NEG
- C4285 220PF 5% 10V C0G-CERM 01005 ROOM=B2B_FOREHEAD
- C4286 220PF 5% 10V C0G-CERM 01005 ROOM=B2B_FOREHEAD

COIL_TO_SPKRAMP_TOP_VSENSE_P — R4287 100 (5% 1/32W MF 01005 ROOM=B2B_FOREHEAD) — COIL_TO_SPKRAMP_TOP_VSENSE_CONN_P
- C4287 100PF 5% 16V NP0-C0G 01005 ROOM=B2B_FOREHEAD

R4287/R4288 to 100ohm to reduce Xtalk
#30299013:Stuff 100pF at C4287/C4288

COIL_TO_SPKRAMP_TOP_VSENSE_N — R4288 100 (5% 1/32W MF 01005 ROOM=B2B_FOREHEAD) — COIL_TO_SPKRAMP_TOP_VSENSE_CONN_N
- C4288 100PF 5% 16V NP0-C0G 01005 ROOM=B2B_FOREHEAD

PROX + ALS I/O

PROX_BI_AOP_INT_L_PWM (感距到CPU的中断信号) — FL4274 1500HM-25%-200MA-0.7DCR (01005, ROOM=B2B_FOREHEAD) — PROX_BI_AOP_INT_PWM_CONN_L
- C4274 18PF 5% 16V CERM 01005 ROOM=B2B_FOREHEAD

#30299013:Change C4274 to 18pF to reduce FCAM coupling

ALS_TO_AOP_INT_L (感光到CPU的中断信号) — R4275 0.00 (0% 1/32W MF 01005 ROOM=B2B_FOREHEAD) — ALS_TO_AOP_INT_CONN_L
- C4275 56PF 5% 25V NP0-C0G-CERM 01005 ROOM=B2B_FOREHEAD

I2C0_AOP_SCL — R4240 0.00 (0% 1/32W MF 01005 ROOM=B2B_FOREHEAD) — I2C0_AOP_TO_PROX_ALS_SCL_CONN (CKPLUS_WAIVE=I2C_PULLUP)
- C4240 56PF 5% 25V NP0-C0G-CERM 01005 ROOM=B2B_FOREHEAD

I2C0_AOP_SDA — R4242 0.00 (0% 1/32W MF 01005 ROOM=B2B_FOREHEAD) — I2C0_AOP_BI_PROX_ALS_SDA_CONN (CKPLUS_WAIVE=I2C_PULLUP)
- C4242 56PF 5% 25V NP0-C0G-CERM 01005 ROOM=B2B_FOREHEAD

CONVOY I/O

PDM_SPKRAMP_TOP_TO_CONVOY_CLK — R4270 100 (5% 1/32W MF 01005 ROOM=B2B_FOREHEAD) — PDM_SPKRAMP_TOP_TO_CONVOY_CLK_CONN
- C4270 56PF 5% 25V NP0-C0G-CERM 01005 ROOM=B2B_FOREHEAD

PDM_CONVOY_TO_SPKRAMP_TOP_DATA — FL4271 1500HM-25%-200MA-0.7DCR (01005, ROOM=B2B_FOREHEAD) — PDM_CONVOY_TO_SPKRAMP_TOP_DATA_CONN
- C4271 56PF 5% 25V NP0-C0G-CERM 01005 ROOM=B2B_FOREHEAD

I2C2_AP_SCL — R4272 0.00 (0% 1/32W MF 01005 ROOM=B2B_FOREHEAD) — I2C2_AP_TO_CONVOY_SCL_CONN
- C4272 56PF 5% 25V NP0-C0G-CERM 01005 ROOM=B2B_FOREHEAD

I2C2_AP_SDA — R4273 0.00 (0% 1/32W MF 01005 ROOM=B2B_FOREHEAD) — I2C2_AP_BI_CONVOY_SDA_CONN
- C4273 56PF 5% 25V NP0-C0G-CERM 01005 ROOM=B2B_FOREHEAD

MIC3

PP_CODEC_TO_FRONTMIC3_BIAS — FL4280 1500HM-25%-200MA-0.7DCR (01005, ROOM=B2B_FOREHEAD) — PP_CODEC_TO_FRONTMIC3_BIAS_CONN
- DZ4280 6.8V-100PF 01005 ROOM=B2B_FOREHEAD

FRONTMIC3_TO_CODEC_AIN3_N — FL4281 1500HM-25%-200MA-0.7DCR (01005, ROOM=B2B_FOREHEAD) — FRONTMIC3_TO_CODEC_AIN3_CONN_N (NO_XNET_CONNECTION=1)
- DZ4281 6.8V-100PF 01005 ROOM=B2B_FOREHEAD

FRONTMIC3_TO_CODEC_AIN3_P — FL4282 1500HM-25%-200MA-0.7DCR (01005, ROOM=B2B_FOREHEAD) — FRONTMIC3_TO_CODEC_AIN3_CONN_P (NO_XNET_CONNECTION=1)
- DZ4282 6.8V-100PF 01005 ROOM=B2B_FOREHEAD

迅维职业技能培训中心 400-800-9990 www.xinxunwei.com 手机维修培训学校

www.xinxunwei.com 400-800-9990

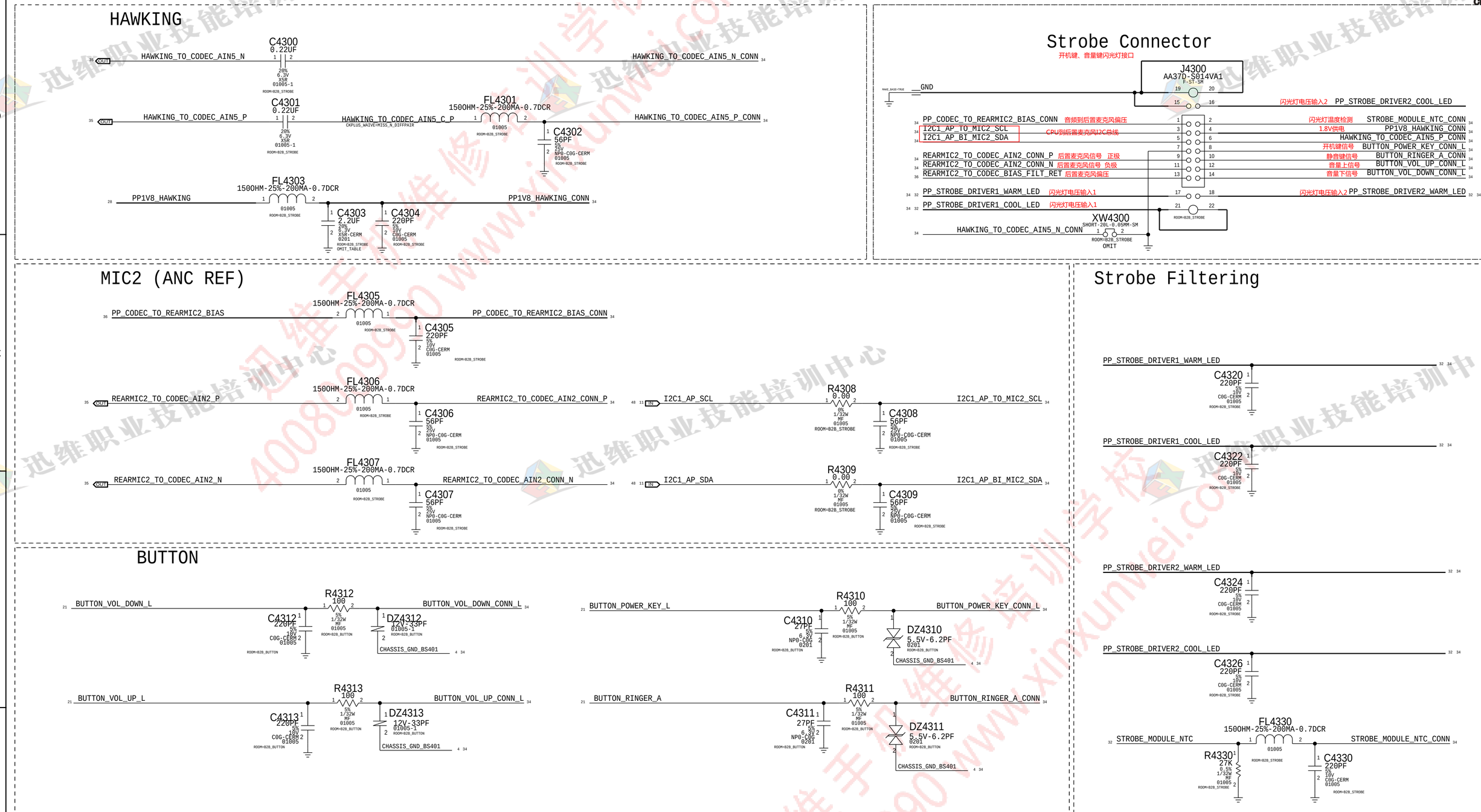

www.xinxunwei.com 400-800-9990

CALLAN AUDIO CODEC (ANALOG INPUTS & OUTPUTS)

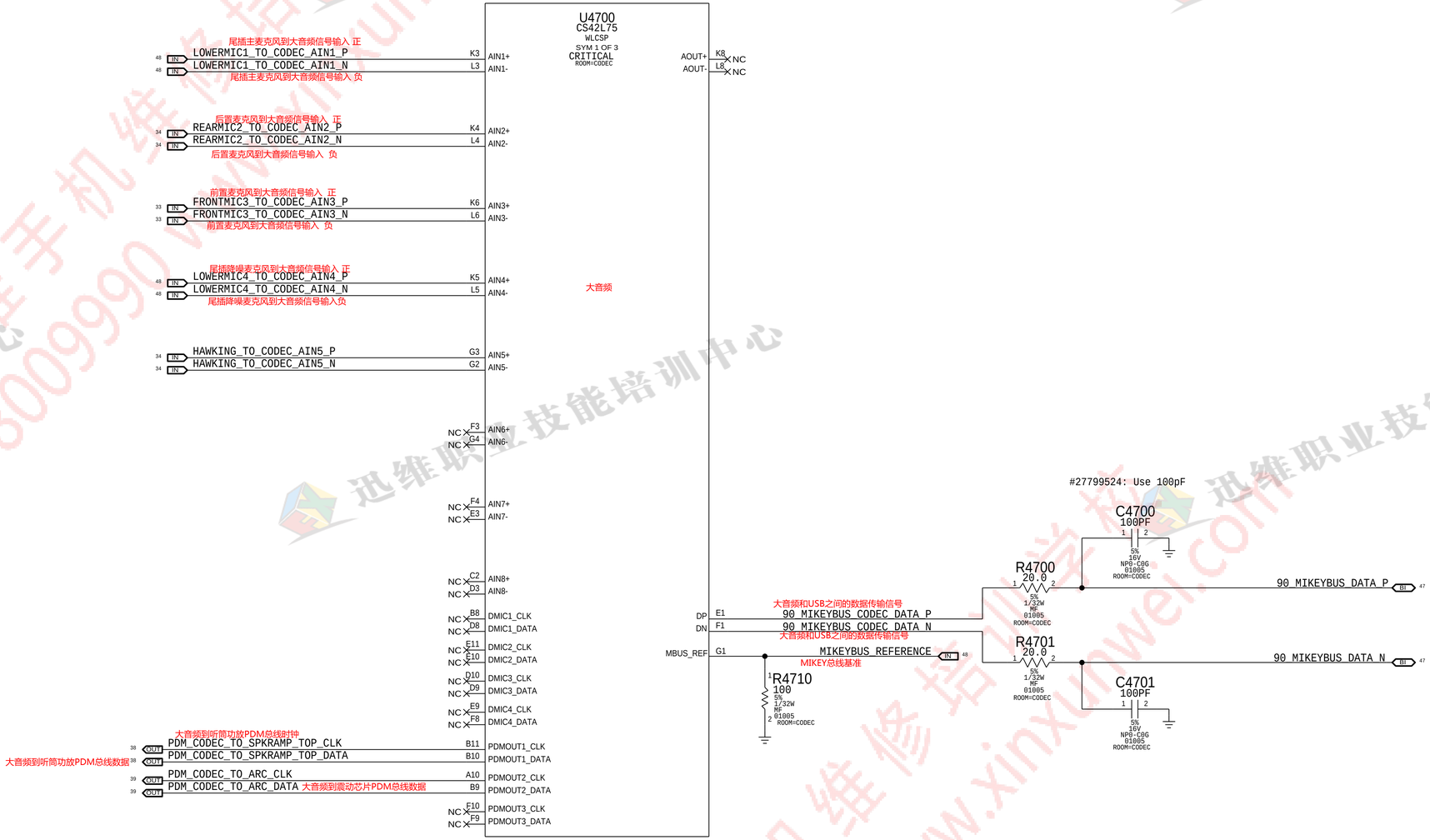

www.xinxunwei.com 400-800-9990

CALLAN AUDIO CODEC (POWER & I/O)

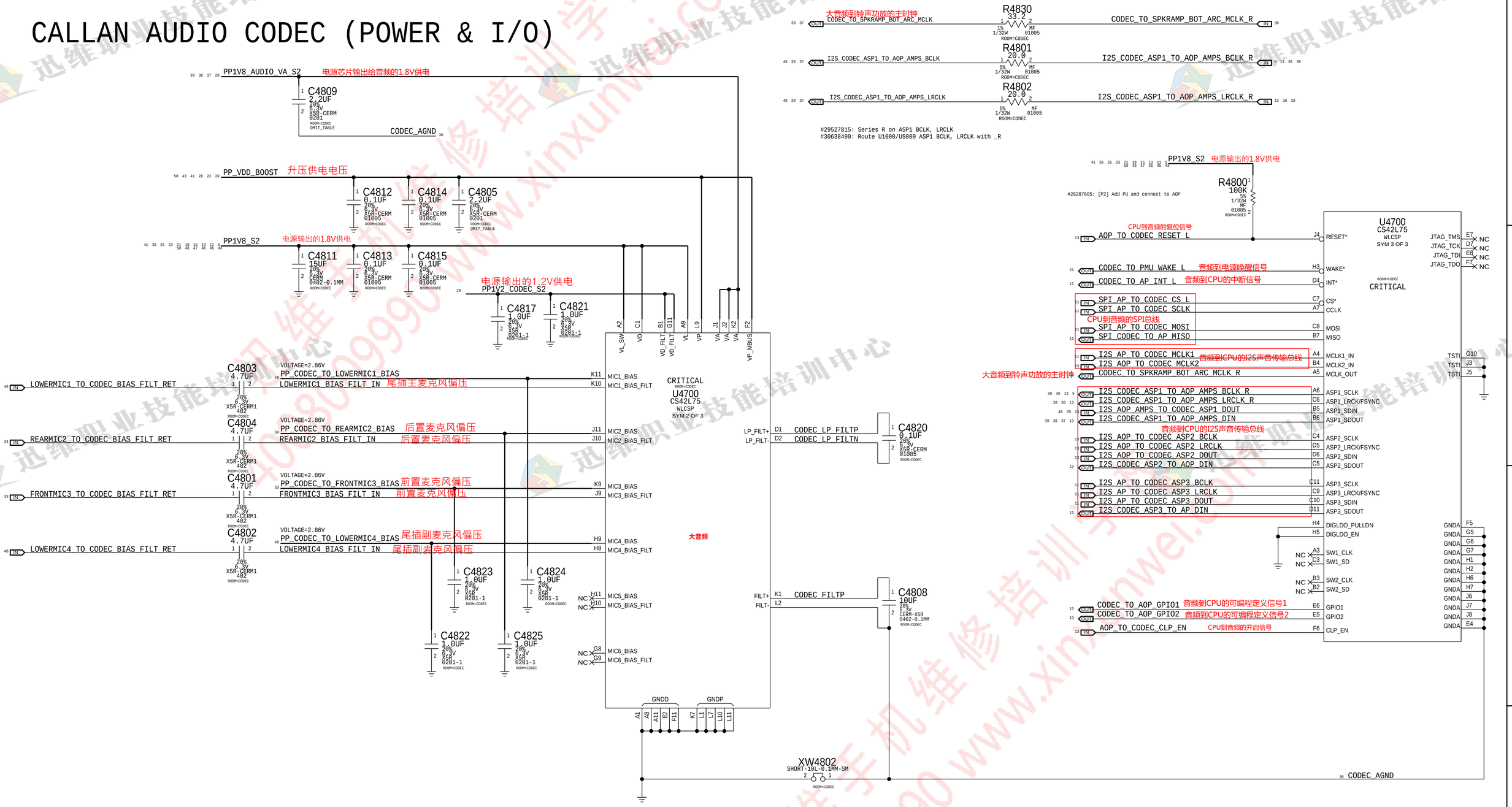

www.xinxunwei.com 400-800-9990

South Speaker Amplifier

APN: 338S00143

I2C ADDRESS: 1000 000x
0x80

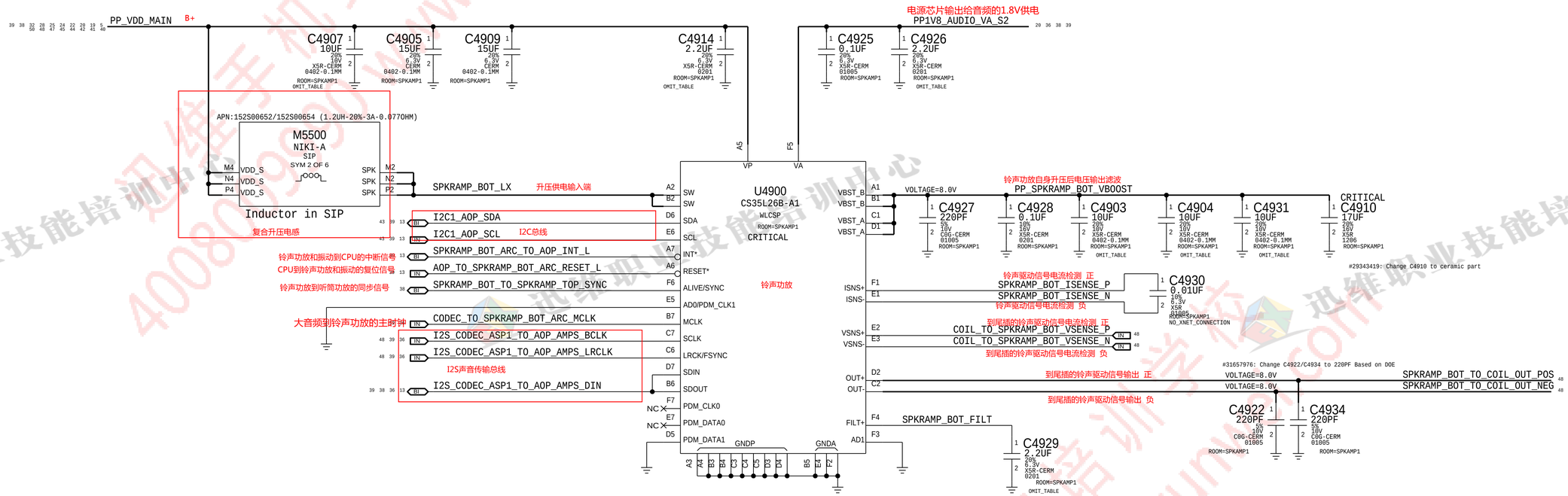

www.xinxunwei.com 400-800-9990

North Speaker Amplifier

APN: 338S00295

I2C ADDRESS: 1000 000x (0x80)

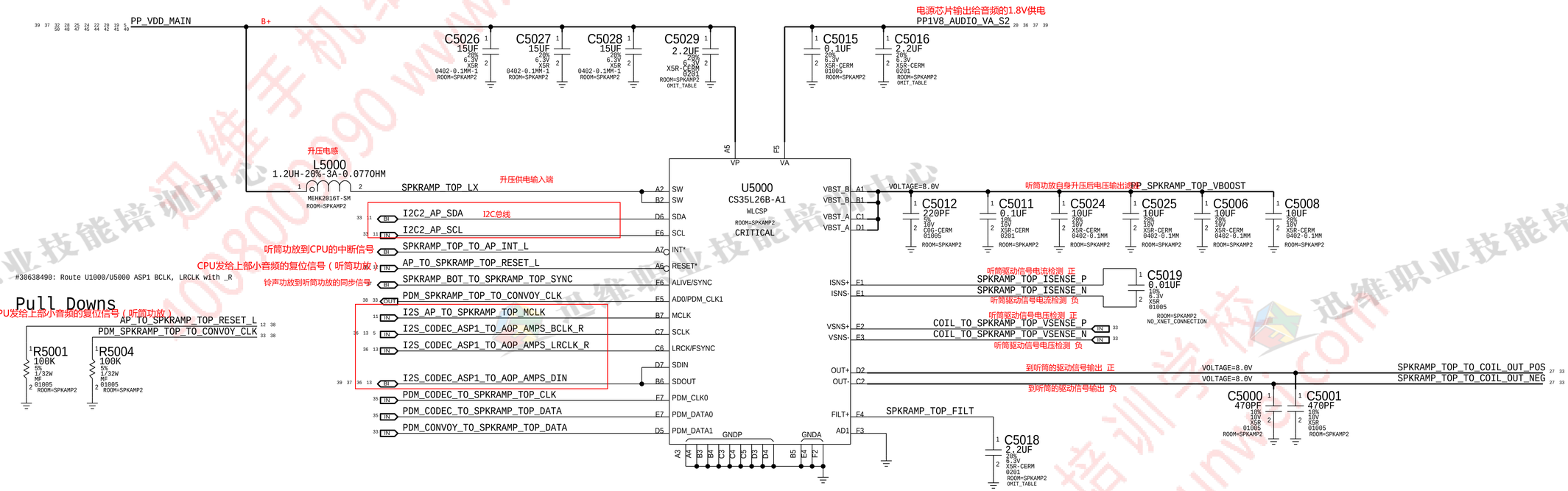

www.xinxunwei.com 400-800-9990

振动驱动芯片

ARC DRIVER

APN: 338S00295
I2C ADDRESS: 1000 001x (0x82)

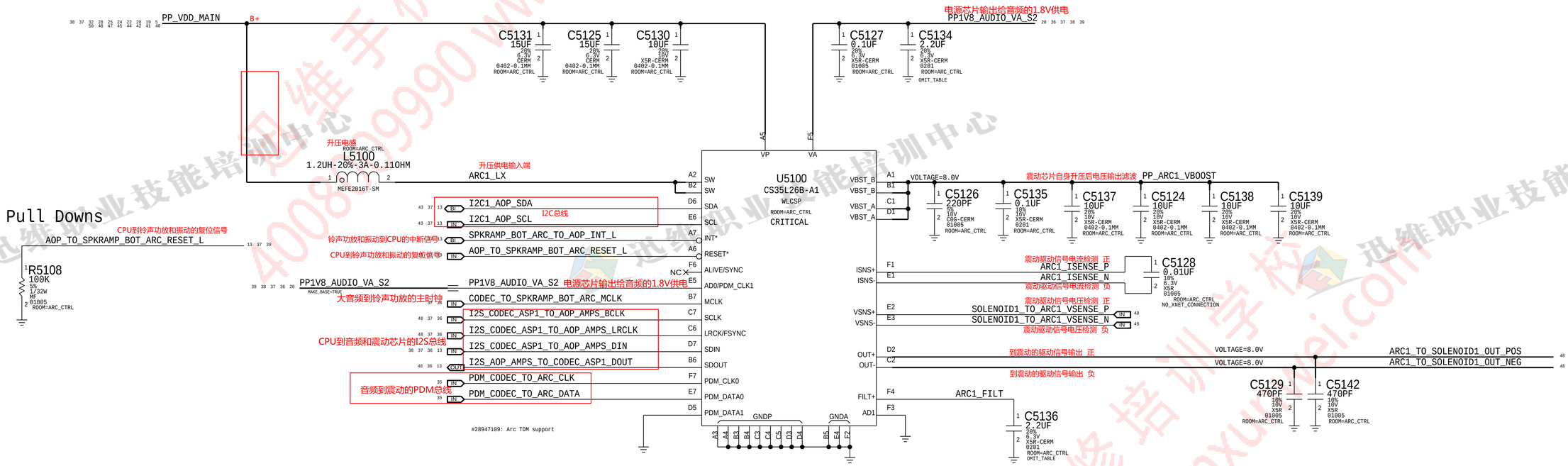

www.xinxunwei.com 400-800-9990

Niki SIP

音频到震动的PDM总线

APN:152S00683 (0.47UF-20%-7.2A-0.028OHM)

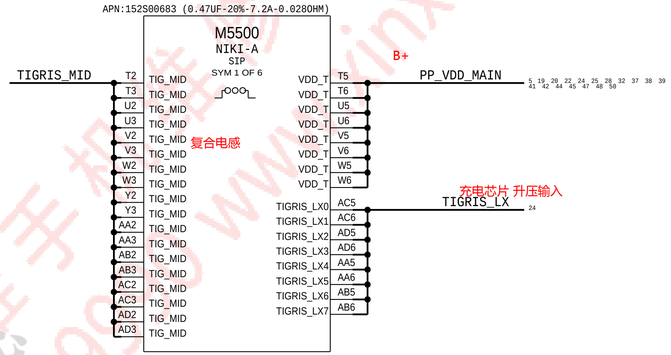

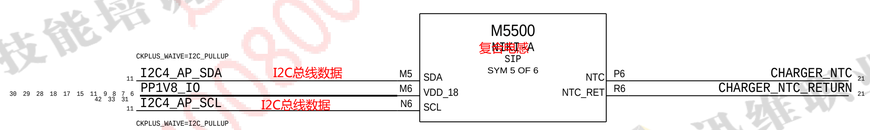

Note: inductors in SIP used for bottom speaker amplifier and backlight
See pages 49, and 56

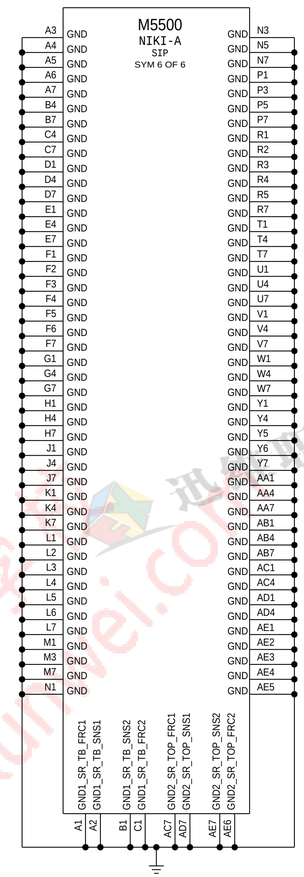

www.xinxunwei.com 400-800-9990

CHESTNUT DISPLAY PMU

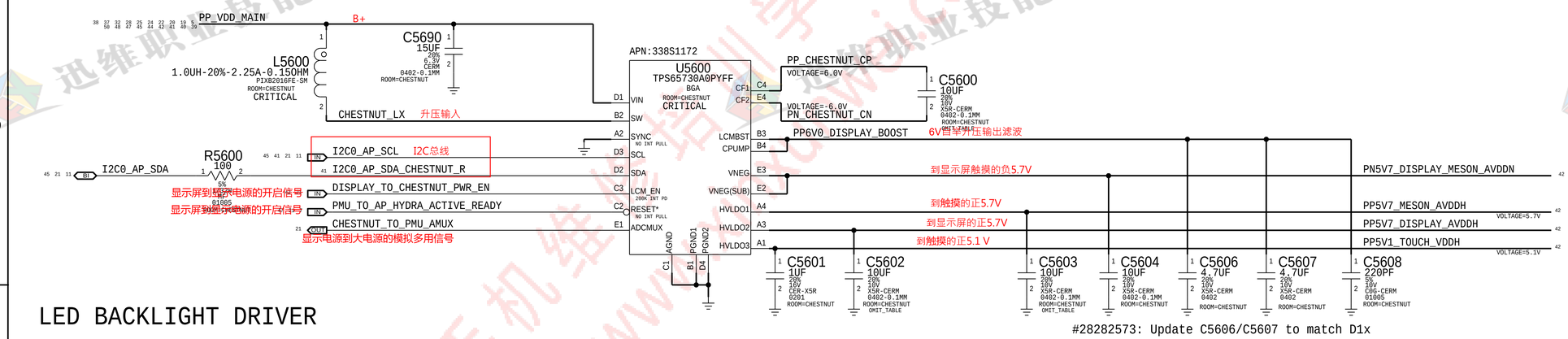

#28282573: Update C5606/C5607 to match D1x

LED BACKLIGHT DRIVER

6LED

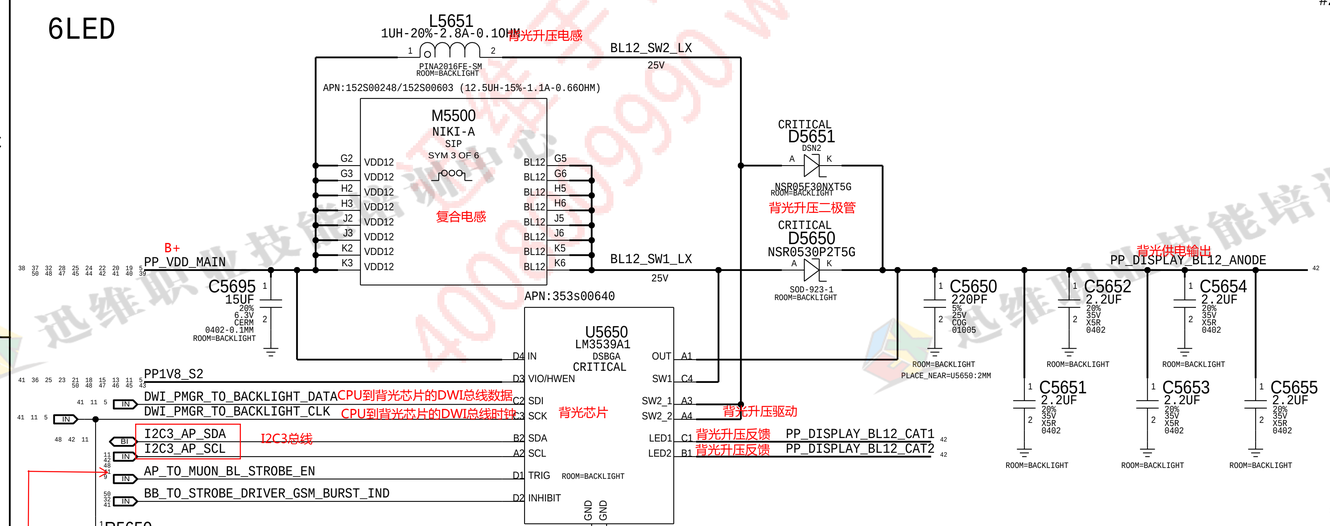

4LED

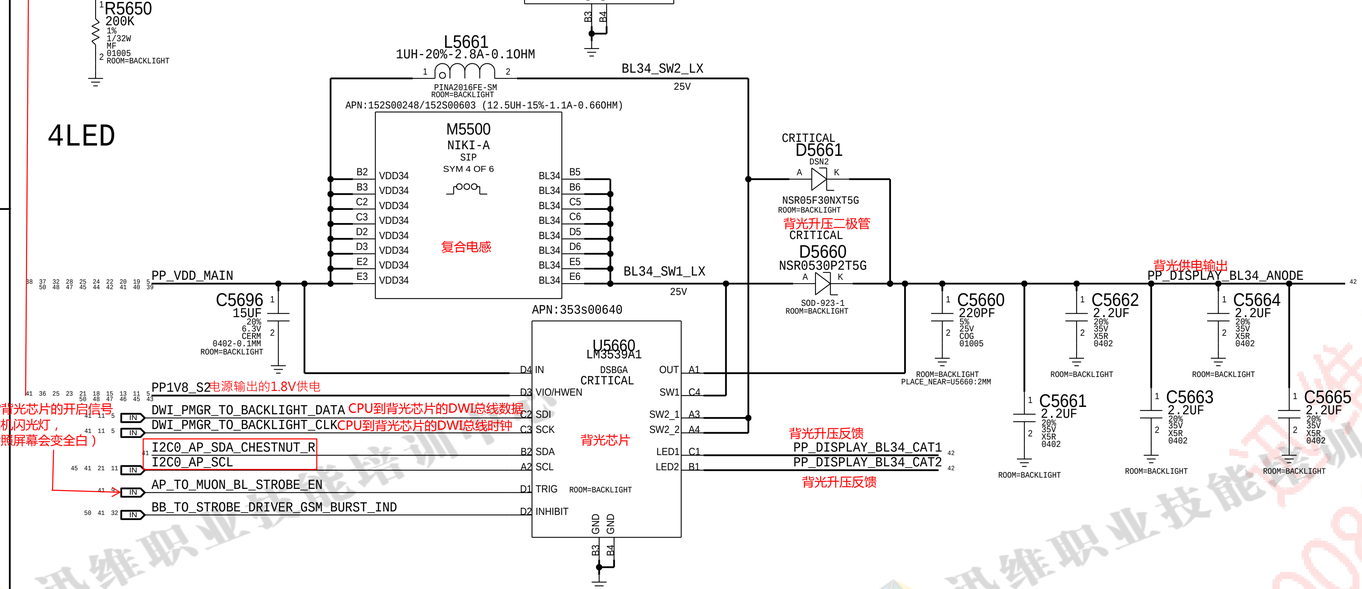

MOJAVE MESA BOOST

APN:353S00671

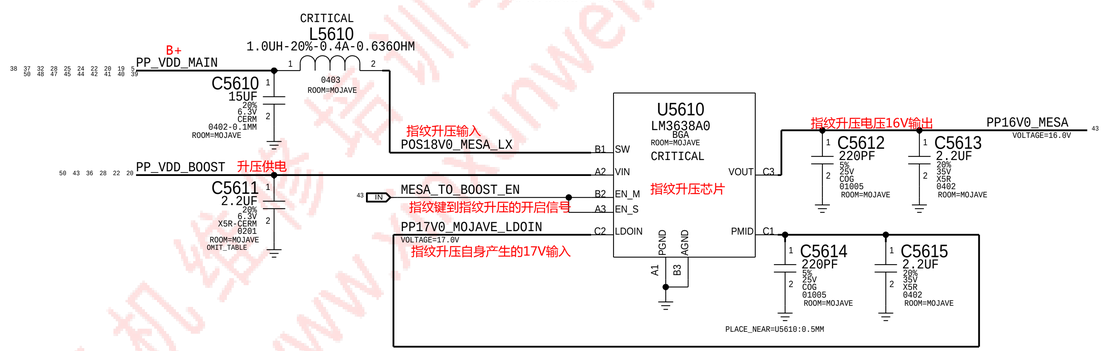

www.xinxunwei.com 400-800-9990

DISPLAY POWER

PP5V7_DISPLAY_AVDDH — FL5700 240-OHM-25%-0.42A-0.31DCR (0201, ROOM=B2B_DISPLAY) — PP5V7_DISPLAY_AVDDH_CONN
- C5702 10UF 20% 10V X5R-CERM 0402-0.1MM ROOM=B2B_DISPLAY OMIT_TABLE
- C5703 10UF 20% 10V X5R-CERM 0402-0.1MM ROOM=B2B_DISPLAY OMIT_TABLE
- C5700 2.2UF 20% 6.3V X5R-CERM 0201 ROOM=B2B_DISPLAY OMIT_TABLE
- C5701 220PF 5% 16V C0G-CERM 01005 ROOM=B2B_DISPLAY

PP1V8_IO — FL5705 240-OHM-25%-0.42A-0.31DCR (0201, ROOM=B2B_DISPLAY) — PP1V8_DISPLAY_CONN
- C5705 2.2UF 20% 6.3V X5R-CERM 0201 ROOM=B2B_DISPLAY OMIT_TABLE
- C5706 220PF 5% 16V C0G-CERM 01005 ROOM=B2B_DISPLAY

PN5V7_DISPLAY_MESON_AVDDN — FL5710 240OHM-25%-0.2A-0.90HM (01005, ROOM=B2B_DISPLAY) — PN5V7_DISPLAY_MESON_AVDDN_CONN
- C5710 220PF 5% 16V C0G-CERM 01005 ROOM=B2B_DISPLAY

PP5V7_MESON_AVDDH — FL5715 240-OHM-25%-0.42A-0.31DCR (0201, ROOM=B2B_DISPLAY) — PP5V7_MESON_AVDDH_CONN
- C5715 220PF 5% 16V C0G-CERM 01005 ROOM=B2B_DISPLAY
- C5716 2.2UF 20% 6.3V X5R-CERM 0201 ROOM=B2B_DISPLAY OMIT_TABLE

DISPLAY CONTROL SIGNALS

DISPLAY_TO_CHESTNUT_PWR_EN (OUT) — FL5750 150OHM-25%-200MA-0.7DCR (01005, ROOM=B2B_DISPLAY) — DISPLAY_TO_CHESTNUT_PWR_EN_CONN
显示屏到显示电源的开启信号
- C5750 220PF 5% 16V C0G-CERM 01005 ROOM=B2B_DISPLAY

AP_TO_DISPLAY_RESET_L (IN) — FL5752 150OHM-25%-200MA-0.7DCR (01005, ROOM=B2B_DISPLAY) — AP_TO_DISPLAY_RESET_CONN_L
- R5753 100K 5% 1/32W MF 01005 ROOM=B2B_DISPLAY
- C5752 220PF 5% 16V C0G-CERM 01005 ROOM=B2B_DISPLAY
- C5751 1000PF 10% 16V X5R 01005 ROOM=B2B_DISPLAY NOSTUFF

PMU_TO_DISPLAY_PANICB (IN) — R5754 10 5% 1/32W MF 01005 ROOM=B2B_DISPLAY — PMU_TO_DISPLAY_PANICB_CONN
- C5754 220PF 5% 16V C0G-CERM 01005 ROOM=B2B_DISPLAY

I2C3_AP_SCL (IN) — R5755 0.00 0% 1/32W MF 01005 ROOM=B2B_DISPLAY — I2C_DISP_EEPROM_SCL_CONN
I2C3_AP_SDA (BI) — R5756 0.00 0% 1/32W MF 01005 ROOM=B2B_DISPLAY — I2C_DISP_EEPROM_SDA_CONN
CKPLUS_WAIVE=I2C_PULLUP
- C5756 56PF 5% 25V NP0-C0G-CERM 01005 ROOM=B2B_DISPLAY
- C5755 56PF 5% 25V NP0-C0G-CERM 01005 ROOM=B2B_DISPLAY

BACKLIGHT

#32464647:C5730 to 56PF to Improve GPS L1 Desense

PP_DISPLAY_BL12_ANODE — R5730 0.00 1% 1/20W MF 0201 ROOM=B2B_DISPLAY — PP_DISPLAY_BL12_ANODE_CONN
- C5730 56PF 5% 25V NP0-C0G-CERM 01005 ROOM=B2B_DISPLAY

PP_DISPLAY_BL12_CAT1 — R5731 0.00 1% 1/20W MF 0201 ROOM=B2B_DISPLAY — PP_DISPLAY_BL12_CAT1_CONN
- C5731 220PF 5% 25V C0G 01005 ROOM=B2B_DISPLAY

PP_DISPLAY_BL12_CAT2 — R5732 0.00 1% 1/20W MF 0201 ROOM=B2B_DISPLAY — PP_DISPLAY_BL12_CAT2_CONN
- C5732 220PF 5% 25V C0G 01005 ROOM=B2B_DISPLAY

PP_DISPLAY_BL34_ANODE — R5733 0.00 1% 1/20W MF 0201 ROOM=B2B_DISPLAY — PP_DISPLAY_BL34_ANODE_CONN
- C5733 220PF 5% 25V C0G 01005 ROOM=B2B_DISPLAY

PP_DISPLAY_BL34_CAT1 — R5734 0.00 1% 1/20W MF 0201 ROOM=B2B_DISPLAY — PP_DISPLAY_BL34_CAT1_CONN
- C5734 220PF 5% 25V C0G 01005 ROOM=B2B_DISPLAY

PP_DISPLAY_BL34_CAT2 — R5735 0.00 1% 1/20W MF 0201 ROOM=B2B_DISPLAY — PP_DISPLAY_BL34_CAT2_CONN
- C5735 220PF 5% 25V C0G 01005 ROOM=B2B_DISPLAY

28463617: Update to 25V Tolerant Cap

TOUCH POWER

PP1V8_TOUCH — FL5720 33-OHM-25%-1500MA (0201, ROOM=B2B_DISPLAY) — PP1V8_TOUCH_CONN
- C5721 2.2UF 20% 6.3V X5R-CERM 0201 ROOM=B2B_DISPLAY OMIT_TABLE
- C5720 220PF 5% 16V C0G-CERM 01005 ROOM=B2B_DISPLAY

PP5V1_TOUCH_VDDH — FL5725 240-OHM-25%-0.42A-0.31DCR (0201, ROOM=B2B_DISPLAY) — PP5V1_TOUCH_VDDH_CONN
- C5725 220PF 5% 16V C0G-CERM 01005 ROOM=B2B_DISPLAY

AOP/TOUCH INTERFACE

DISPLAY_TO_MANY_BSYNC (OUT) 显示屏发出的同步信号 — FL5760 150OHM-25%-200MA-0.7DCR (01005, ROOM=B2B_DISPLAY) — DISPLAY_TO_MANY_BSYNC_CONN
- C5760 56PF 5% 25V NP0-C0G-CERM 01005 ROOM=B2B_DISPLAY

TOUCH_TO_AOP_GPO (OUT) — FL5762 150OHM-25%-200MA-0.7DCR (01005, ROOM=B2B_DISPLAY) — TOUCH_TO_AOP_GPO_CONN
触摸到CPU的可编程定义信号
- C5762 56PF 5% 25V NP0-C0G-CERM 01005 ROOM=B2B_DISPLAY

AOP_TO_TOUCH_PROX_STATE (IN) — FL5764 150OHM-25%-200MA-0.7DCR (01005, ROOM=B2B_DISPLAY) — AOP_TO_TOUCH_PROX_STATE_CONN
- C5764 56PF 5% 25V NP0-C0G-CERM 01005 ROOM=B2B_DISPLAY

TOUCH_TO_AP_INT_L (OUT) — FL5766 150OHM-25%-200MA-0.7DCR (01005, ROOM=B2B_DISPLAY) — TOUCH_TO_AP_INT_CONN_L
- C5766 220PF 5% 16V C0G-CERM 01005 ROOM=B2B_DISPLAY

CPU到触摸的32K时钟
AP_TO_TOUCH_CLK32K_RESET_L (IN) — R5768 33.2 1% 1/32W MF 01005 ROOM=B2B_DISPLAY — AP_TO_TOUCH_CLK32K_RESET_CONN_L
- C5768 100PF 5% 16V NP0-C0G 01005 ROOM=B2B_DISPLAY

Per #27955644:Use 100pF to match D1x

AP/TOUCH INTERFACE

SPI_AP_TO_TOUCH_CS_L (IN) — FL5770 1500HM-25%-200MA-0.7DCR (01005, ROOM=B2B_DISPLAY) — SPI_AP_TO_TOUCH_CS_CONN_L
- C5770 56PF 5% 25V NP0-C0G-CERM 01005 ROOM=B2B_DISPLAY

SPI_AP_TO_TOUCH_SCLK (IN) — R5772 0.00 0% 1/32W MF 01005 ROOM=B2B_DISPLAY — SPI_AP_TO_TOUCH_SCLK_CONN
- C5772 56PF 5% 25V NP0-C0G-CERM 01005 ROOM=B2B_DISPLAY

SPI_AP_TO_TOUCH_MOSI (IN) — FL5774 1500HM-25%-200MA-0.7DCR (01005, ROOM=B2B_DISPLAY) — SPI_AP_TO_TOUCH_MOSI_CONN
- C5774 56PF 5% 25V NP0-C0G-CERM 01005 ROOM=B2B_DISPLAY

SPI_TOUCH_TO_AP_MISO (OUT) — FL5776 1500HM-25%-200MA-0.7DCR (01005, ROOM=B2B_DISPLAY) — SPI_TOUCH_TO_AP_MISO_CONN
- C5776 56PF 5% 25V NP0-C0G-CERM 01005 ROOM=B2B_DISPLAY

CPU到触摸和3D TOUCH的复位信号
AP_TO_TOUCH_MAMBA_RESET_L (IN) — FL5778 150OHM-25%-200MA-0.7DCR (01005, ROOM=B2B_DISPLAY) — AP_TO_TOUCH_MAMBA_RESET_CONN_L
- C5778 220PF 5% 10V C0G-CERM 01005 ROOM=B2B_DISPLAY
- C5779 220PF 5% 10V C0G-CERM 01005 ROOM=B2B_MAMBA_MESA

ORB/TOUCH INTERFACE

PP1V8_TOUCH
- R5785 10K 5% 1/32W MF 01005 ROOM=B2B_MAMBA_MESA
- R5786 10K 5% 1/32W MF 01005 ROOM=B2B_MAMBA_MESA BOMOPTION=NOSTUFF

Stuff 10k PU with 200k to meet spec

I2C_TOUCH_TO_MAMBA_SCL_R — R5787 200 1% 1/32W MF 01005 ROOM=B2B_DISPLAY — I2C_TOUCH_TO_MAMBA_SCL (OUT)
I2C_TOUCH_BI_MAMBA_SDA (BI)
- C5788 56PF 5% 25V NP0-C0G-CERM 01005 ROOM=B2B_DISPLAY
- C5787 56PF 5% 25V NP0-C0G-CERM 01005 ROOM=B2B_MAMBA_MESA

To J5700 DISP/TOUCH B2B

#28227044:Have cap on each side of R5787

DISPLAY + TOUCH CONNECTOR

MLB: 516S00168

J5700 BB35C-RA48-3A F-ST-SM (ROOM=B2B_DISPLAY)

Pin	Signal	Pin	Signal
1	MAMBA_TO_DISPLAY_MDRIVE	2	I2C_DISP_EEPROM_SCL_CONN
3	I2C_DISP_EEPROM_SDA_CONN	4	I2C_TOUCH_BI_MAMBA_SDA
5	I2C_TOUCH_TO_MAMBA_SCL_R	6	SPI_AP_TO_TOUCH_MOSI_CONN
7	SPI_TOUCH_TO_AP_MISO_CONN	8	TOUCH_TO_AP_INT_CONN_L
9	SPI_AP_TO_TOUCH_CS_CONN_L	10	AP_TO_TOUCH_MAMBA_RESET_CONN_L
11	AP_TO_TOUCH_CLK32K_RESET_CONN_L	12	#27428158:Ground J5700.12
13	SPI_AP_TO_TOUCH_SCLK_CONN	14	AOP_TO_TOUCH_PROX_STATE_CONN
15	TOUCH_TO_AOP_GPO_CONN	16	PMU_TO_DISPLAY_PANICB_CONN
17	AP_TO_DISPLAY_RESET_CONN_L	18	PP1V8_DISPLAY_CONN
19	PP5V1_TOUCH_VDDH_CONN	20	PP5V7_DISPLAY_AVDDH_CONN
21	PP1V8_TOUCH_CONN	22	DISPLAY_TO_CHESTNUT_PWR_EN_CONN
23	PN5V7_DISPLAY_MESON_AVDDN_CONN	24	DISPLAY_TO_MANY_BSYNC_CONN
25	PP5V7_MESON_AVDDH_CONN	26	GND_VOID=TRUE
27	DISPLAY_TO_MAMBA_MSYNC_CONN	28	90_MIPI_AP_TO_DISPLAY_DATA0_CONN_P
29	TP_GALILEO_PHOTON_PIFA_CONN	30	90_MIPI_AP_TO_DISPLAY_DATA0_CONN_N
31	90_MIPI_AP_TO_DISPLAY_CLK_CONN_P	32	GND_VOID=TRUE
33	90_MIPI_AP_TO_DISPLAY_CLK_CONN_N	34	90_MIPI_AP_TO_DISPLAY_DATA1_CONN_P
35	GND_VOID=TRUE	36	90_MIPI_AP_TO_DISPLAY_DATA1_CONN_N
37	PP_DISPLAY_BL12_CAT1_CONN	38	GND_VOID=TRUE
39	PP_DISPLAY_BL12_ANODE_CONN	40	90_MIPI_AP_TO_DISPLAY_DATA2_CONN_P
41	PP_DISPLAY_BL12_CAT2_CONN	42	90_MIPI_AP_TO_DISPLAY_DATA2_CONN_N
43	PP_DISPLAY_BL34_CAT1_CONN	44	GND_VOID=TRUE
45	PP_DISPLAY_BL34_ANODE_CONN	46	90_MIPI_AP_TO_DISPLAY_DATA3_CONN_P
47	PP_DISPLAY_BL34_CAT2_CONN	48	90_MIPI_AP_TO_DISPLAY_DATA3_CONN_N
49	GND_VOID=TRUE	50	
51		52	
53		54	

PP5700 P2MM-NSM (ROOM=TEST)

CPU到显示屏的I2C总线
触摸屏到指纹的I2C总线
触摸屏到指纹的I2C总线
触摸到CPU的SPI总线
触摸到CPU的中断信号
CPU到触摸和3D TOUCH的复位信号
触摸到CPU的SPI总线
CPU到触摸的32K时钟
CPU到触摸的SPI总线
触摸到CPU的可编程定义信号
CPU到显示屏的复位
触摸5.1V供电
触摸1.8V供电
显示触摸-5.7V供电
触摸5.7V供电
显示屏到3D TOUCH的同步信号
CPU到显示屏的
MIPI总线
背光供电反馈信号
背光供电
背光供电反馈信号
背光供电反馈信号
背光供电
背光供电反馈信号
CPU到触摸的感距控制信号
显示屏1.8V供电
显示屏的正5.7V
显示屏到显示电源的开启信号
显示屏发出的同步信号
CPU到显示屏的MIPI总线

#27978784:Add GND_VOID=TRUE to MIPI pins

DISPLAY MIPI

- 90_MIPI_AP_TO_DISPLAY_CLK_N — L5754 CRITICAL 650HM-0.7-2GHZ-3.40HM TAM0605 SYM_VER-2 — 90_MIPI_AP_TO_DISPLAY_CLK_CONN_N
- 90_MIPI_AP_TO_DISPLAY_CLK_P — ROOM=B2B_DISPLAY — 90_MIPI_AP_TO_DISPLAY_CLK_CONN_P
- 90_MIPI_AP_TO_DISPLAY_DATA0_P — L5750 CRITICAL 650HM-0.7-2GHZ-3.40HM TAM0605 SYM_VER-2 — 90_MIPI_AP_TO_DISPLAY_DATA0_CONN_P
- 90_MIPI_AP_TO_DISPLAY_DATA0_N — ROOM=B2B_DISPLAY — 90_MIPI_AP_TO_DISPLAY_DATA0_CONN_N
- 90_MIPI_AP_TO_DISPLAY_DATA1_P — L5751 CRITICAL 650HM-0.7-2GHZ-3.40HM TAM0605 SYM_VER-2 — 90_MIPI_AP_TO_DISPLAY_DATA1_CONN_P
- 90_MIPI_AP_TO_DISPLAY_DATA1_N — ROOM=B2B_DISPLAY — 90_MIPI_AP_TO_DISPLAY_DATA1_CONN_N
- 90_MIPI_AP_TO_DISPLAY_DATA2_P — L5752 CRITICAL 650HM-0.7-2GHZ-3.40HM TAM0605 SYM_VER-2 — 90_MIPI_AP_TO_DISPLAY_DATA2_CONN_P
- 90_MIPI_AP_TO_DISPLAY_DATA2_N — ROOM=B2B_DISPLAY — 90_MIPI_AP_TO_DISPLAY_DATA2_CONN_N
- 90_MIPI_AP_TO_DISPLAY_DATA3_P — L5753 CRITICAL 650HM-0.7-2GHZ-3.40HM TAM0605 SYM_VER-2 — 90_MIPI_AP_TO_DISPLAY_DATA3_CONN_P
- 90_MIPI_AP_TO_DISPLAY_DATA3_N — ROOM=B2B_DISPLAY — 90_MIPI_AP_TO_DISPLAY_DATA3_CONN_N

PP_VDD_MAIN
- C5742 220PF 5% 10V C0G-CERM 01005 ROOM=B2B_DISPLAY
- C5744 220PF 5% 10V C0G-CERM 01005 ROOM=B2B_DISPLAY
- C5746 220PF 5% 10V C0G-CERM 01005 ROOM=B2B_DISPLAY
- C5748 220PF 5% 10V C0G-CERM 01005 ROOM=B2B_DISPLAY
- C5790 220PF 5% 10V C0G-CERM 01005 ROOM=B2B_DISPLAY
- C5741 220PF 5% 10V C0G-CERM 01005 ROOM=B2B_DISPLAY
- C5743 220PF 5% 10V C0G-CERM 01005 ROOM=B2B_DISPLAY
- C5745 220PF 5% 10V C0G-CERM 01005 ROOM=B2B_DISPLAY
- C5747 220PF 5% 10V C0G-CERM 01005 ROOM=B2B_DISPLAY
- C5749 220PF 5% 10V C0G-CERM 01005 ROOM=B2B_DISPLAY
- C5791 220PF 5% 10V C0G-CERM 01005 ROOM=B2B_DISPLAY

AC return path (LCM MIPI):GND/VDD_MAIN reference

www.xinxunwei.com 400-800-9990

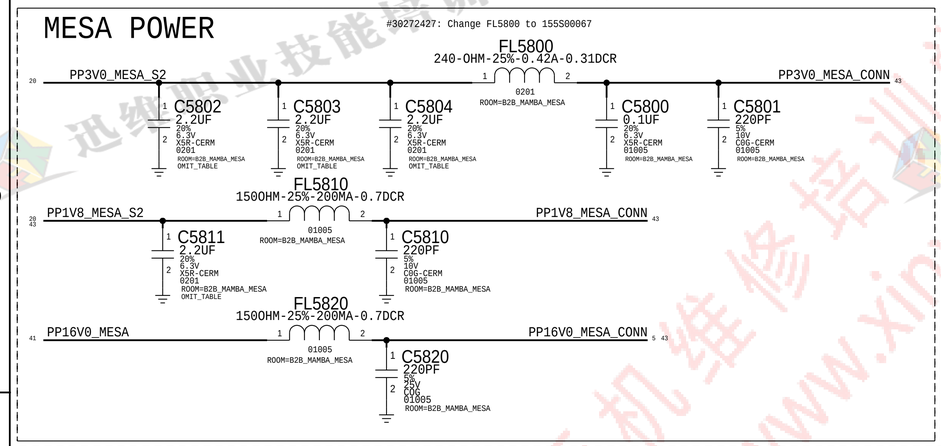

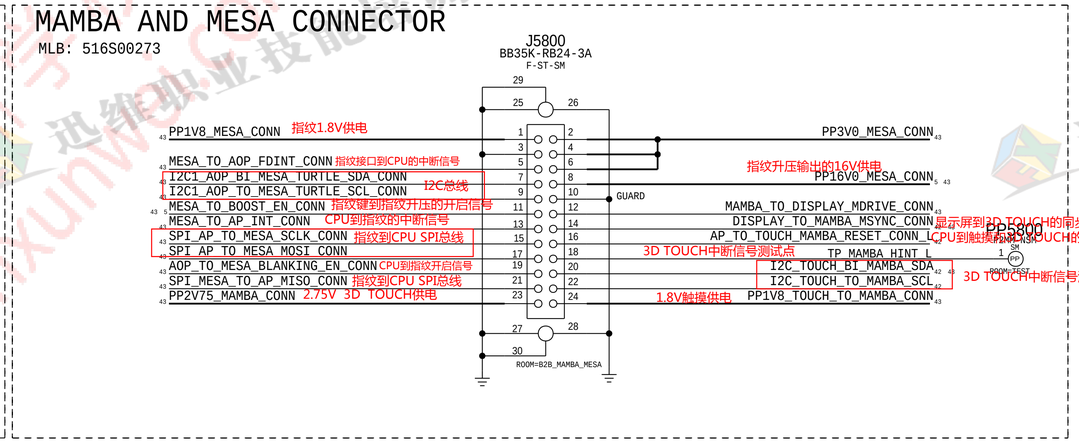

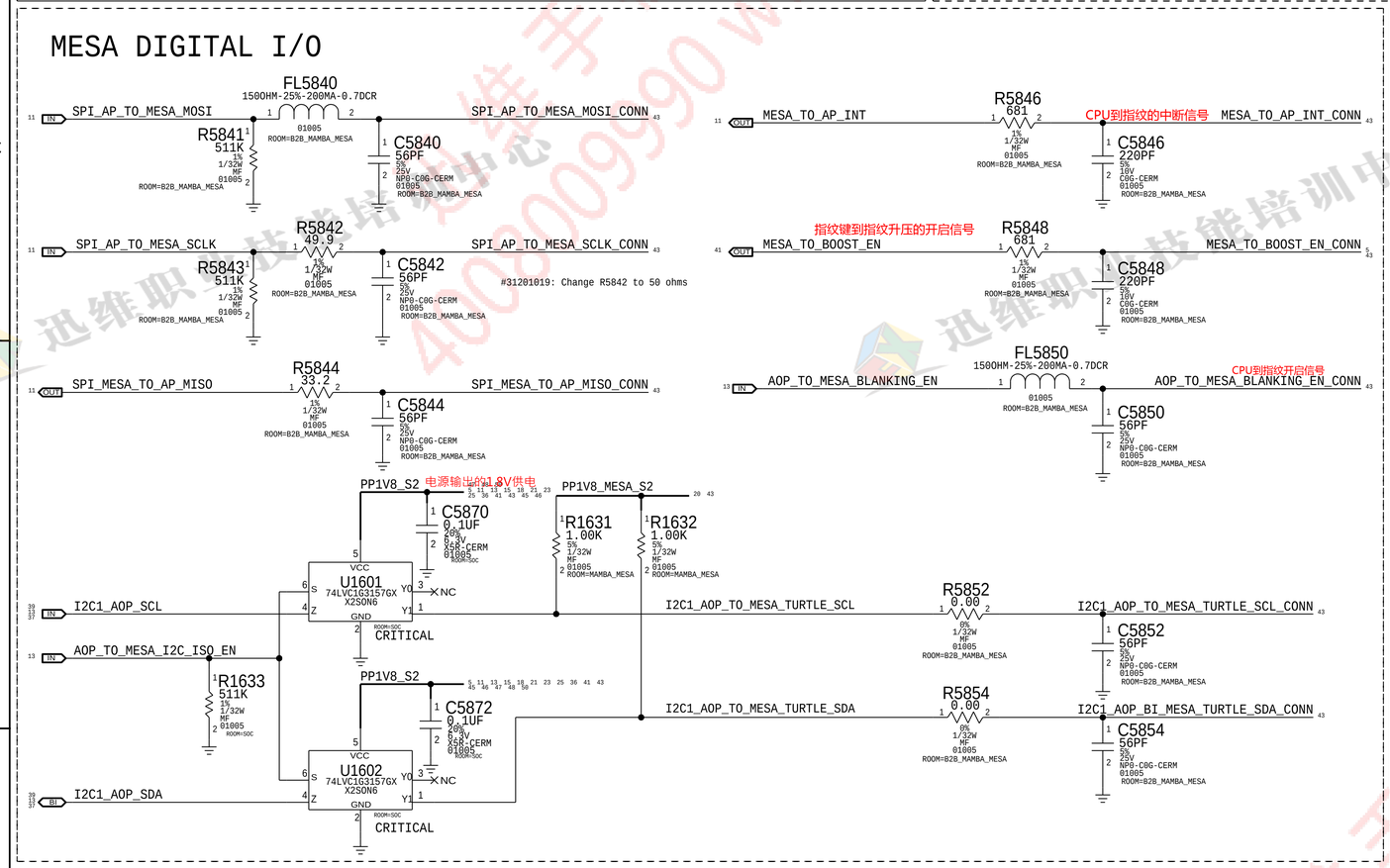

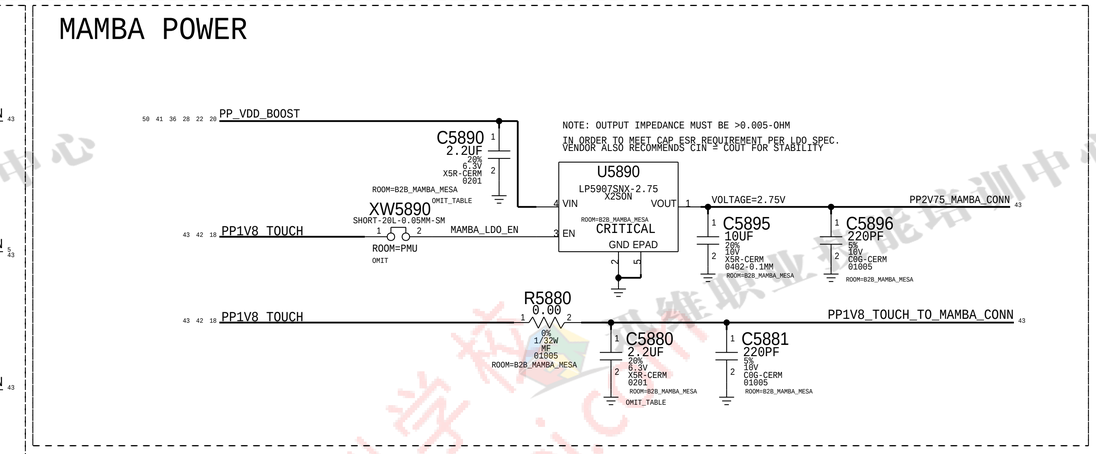

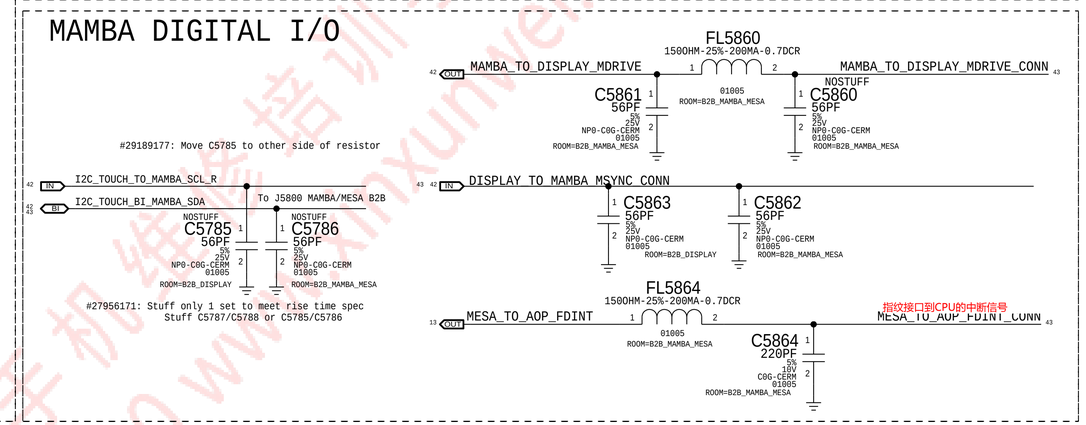

CPU到指纹开启信号

www.xinxunwei.com 400-800-9990

VDD_MAIN OV CUT-OFF CIRCUIT

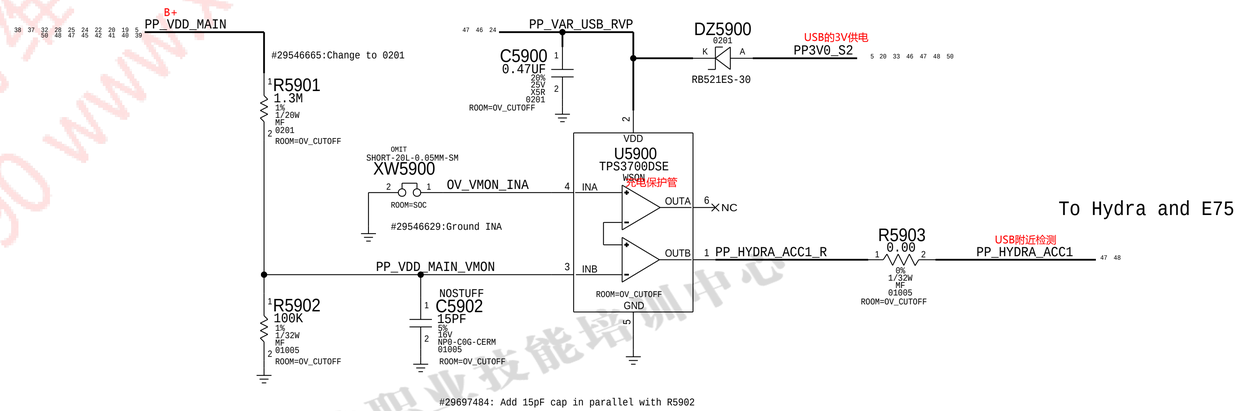

www.xinxunwei.com 400-800-9990

ACCESSORY BUCK

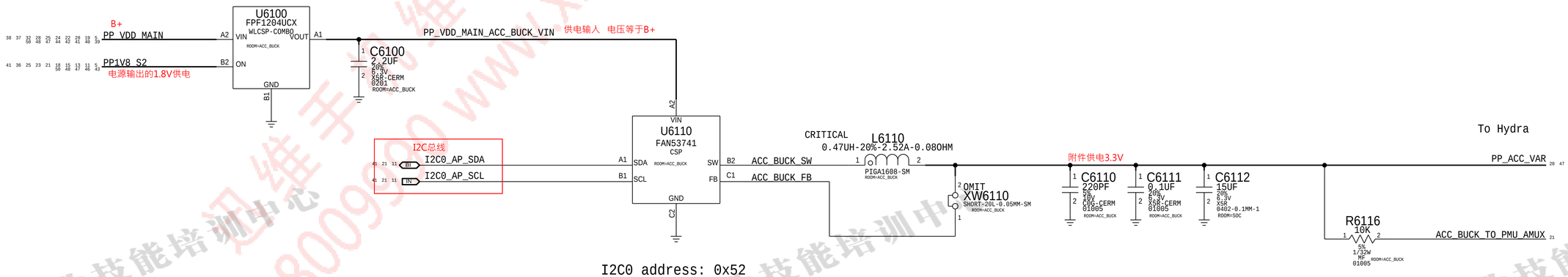

I2C0 address: 0x52

www.xinxunwei.com 400-800-9990

USB-PD

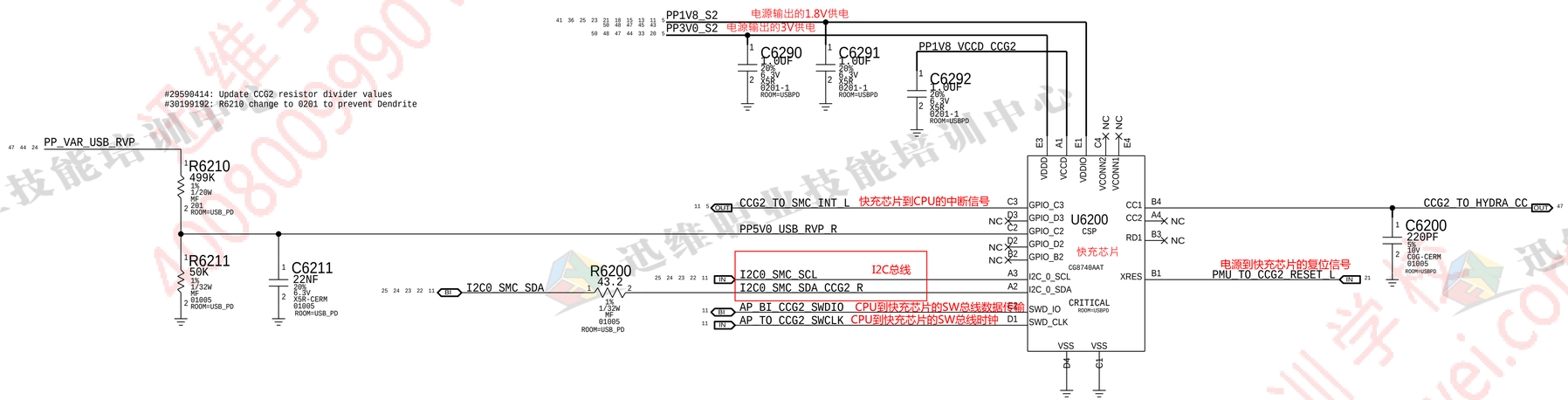

www.xinxunwei.com 400-800-9990

HYDRA

I2C ADDRESS: 0011010X

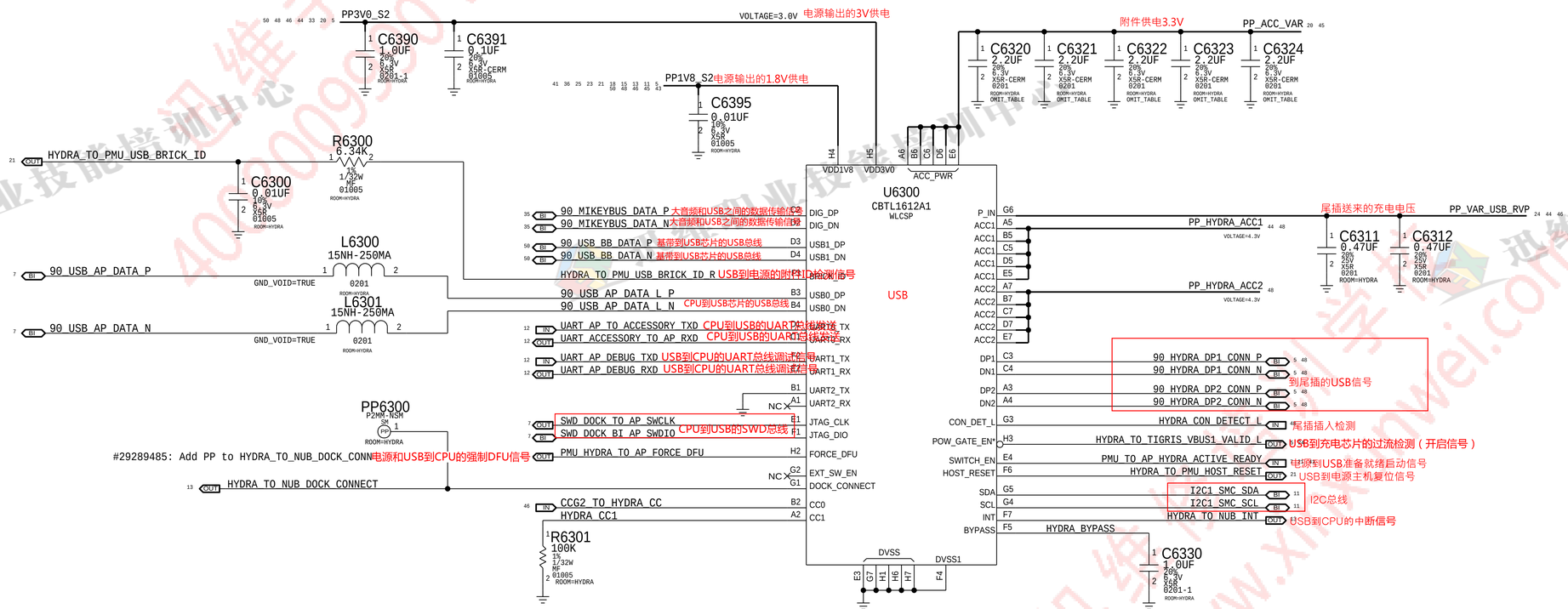

UART TX/RX pin names on Hydra match signal names (i.e. TX pin is input and connects to TX signal)

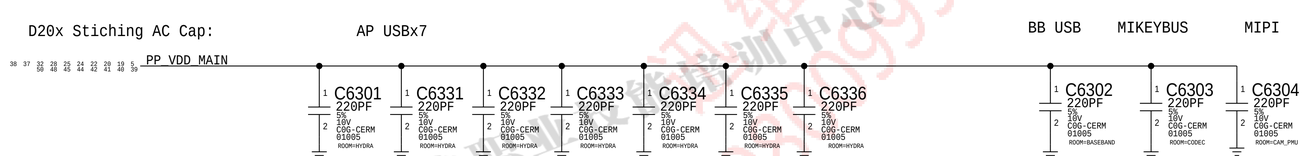

www.xinxunwei.com 400-800-9990

ANTENNA

PP3V0_S2 — FL6430 1500HM-25%-200MA-0.7DCR (01005, ROOM=B2B_DOCK) — PP3V0_LAT_CONN
C6430 220PF 5% 10V C0G-CERM 01005 ROOM=B2B_DOCK

PP1V8_S2 电源输出的1.8V供电 — FL6432 1500HM-25%-200MA-0.7DCR (01005, ROOM=B2B_DOCK) — PP1V8_LAT_ARC_CONN
C6432 220PF 5% 10V C0G-CERM 01005 ROOM=B2B_DOCK

LAT_TUNER_RFFE1_CLK — R6434 0.00 (0% 1/32W MF 01005 ROOM=B2B_DOCK) — LAT_TUNER_RFFE1_CLK_CONN
C6434 33PF 5% 16V NP0-C0G-CERM 01005 ROOM=B2B_DOCK

#31609563: Update C6434/C6436 to 33pF (D21)

LAT_TUNER_RFFE1_DATA — R6436 0.00 (0% 1/32W MF 01005 ROOM=B2B_DOCK) — LAT_TUNER_RFFE1_DATA_CONN
C6436 33PF 5% 16V NP0-C0G-CERM 01005 ROOM=B2B_DOCK

BB_TO_LAT_GPO1 — FL6438 1500HM-25%-200MA-0.7DCR (01005, ROOM=B2B_DOCK) — BB_TO_LAT_GPO1_CONN
C6438 56PF 5% 25V NP0-C0G-CERM 01005 ROOM=B2B_DOCK

BB_TO_LAT_GPO2 — FL6440 1500HM-25%-200MA-0.7DCR (01005, ROOM=B2B_DOCK) — BB_TO_LAT_GPO2_CONN
C6440 56PF 5% 25V NP0-C0G-CERM 01005 ROOM=B2B_DOCK

BB_TO_LAT_GPO3 — FL6442 1500HM-25%-200MA-0.7DCR (01005, ROOM=B2B_DOCK) — BB_TO_LAT_GPO3_CONN
C6442 56PF 5% 25V NP0-C0G-CERM 01005 ROOM=B2B_DOCK

BB_TO_LAT_GPO4 — FL6444 1500HM-25%-200MA-0.7DCR (01005, ROOM=B2B_DOCK) — BB_TO_LAT_GPO4_CONN
C6444 56PF 5% 25V NP0-C0G-CERM 01005 ROOM=B2B_DOCK

HYDRA

PP_VDD_MAIN
C6415 220PF 5% 10V C0G-CERM 01005 ROOM=B2B_DOCK
C6416 220PF 5% 10V C0G-CERM 01005 ROOM=B2B_DOCK

AC return path (USB):GND/VDD_MAIN reference

HYDRA_CON_DETECT_L 尾插插入检测 — R6410 100 (1% 1/32W MF 01005 ROOM=B2B_DOCK) — HYDRA_CON_DETECT_CONN_L
C6410 27PF 5% 16V NP0-C0G 01005 ROOM=B2B_DOCK

PP_HYDRA_ACC1 — FL6411 10-OHM-1.1A (01005, ROOM=B2B_DOCK) — PP_HYDRA_ACC1_CONN
C6411 100PF 5% 16V NP0-C0G 01005 ROOM=B2B_DOCK

NOTE:Another 100pF on dock flex
[P1.5] Use 16V Part

PP_HYDRA_ACC2 — FL6413 22-OHM-25%-1800MA (0201, ROOM=B2B_DOCK) — PP_HYDRA_ACC2_CONN
C6413 220PF 5% 25V C0G 01005 ROOM=B2B_DOCK

#28565582:[P2] Reduce to 100pF
[P1.5] Use 16V Part
#31347215: [CRB] Revert to 220pF

ARC

I2C3_AP_SCL — R6422 0.00 (0% 1/32W MF 01005 ROOM=B2B_DOCK) — I2C3_AP_TO_SAKONNET_SCL_CONN
C6422 56PF 5% 25V NP0-C0G-CERM 01005 ROOM=B2B_DOCK

I2C3_AP_SDA — R6424 0.00 (0% 1/32W MF 01005 ROOM=B2B_DOCK) — I2C3_AP_BI_SAKONNET_SDA_CONN
C6424 56PF 5% 25V NP0-C0G-CERM 01005 ROOM=B2B_DOCK

ARC1_TO_SOLENOID1_OUT_POS
ARC1_TO_SOLENOID1_OUT_NEG — 到震动的驱动信号输出
C6471 220PF 5% 10V C0G-CERM 01005 ROOM=B2B_DOCK
C6470 220PF 5% 10V C0G-CERM 01005 ROOM=B2B_DOCK

I2S_CODEC_ASP1_TO_AOP_AMPS_BCLK (IN) — R6419 100 (1% 1/32W MF 01005 ROOM=B2B_DOCK) — I2S_CODEC_ASP1_TO_AOP_AMPS_BCLK_CONN
NOSTUFF C6419 56PF 5% 25V NP0-C0G-CERM 01005 ROOM=B2B_DOCK

I2S_CODEC_ASP1_TO_AOP_AMPS_LRCLK (IN) — R6420 100 (1% 1/32W MF 01005 ROOM=B2B_DOCK) — I2S_CODEC_ASP1_TO_AOP_AMPS_LRCLK_CONN
NOSTUFF C6420 56PF 5% 25V NP0-C0G-CERM 01005 ROOM=B2B_DOCK

I2S_AOP_AMPS_TO_CODEC_ASP1_DOUT (OUT) — R6421 100 (1% 1/32W MF 01005 ROOM=B2B_DOCK) — I2S_AOP_AMPS_TO_CODEC_ASP1_DOUT_CONN
NOSTUFF C6421 56PF 5% 25V NP0-C0G-CERM 01005 ROOM=B2B_DOCK

MICS

LOWERMIC1_TO_CODEC_AIN1_P — FL6450 1500HM-25%-200MA-0.7DCR (01005, ROOM=B2B_DOCK) — LOWERMIC1_TO_CODEC_AIN1_CONN_P 尾插主麦克风到大音频信号输入 正
C6450 56PF 5% 25V NP0-C0G-CERM 01005 ROOM=B2B_DOCK

尾插主麦克风到大音频信号输入 负 — LOWERMIC1_TO_CODEC_AIN1_N — FL6452 1500HM-25%-200MA-0.7DCR (01005, ROOM=B2B_DOCK) — LOWERMIC1_TO_CODEC_AIN1_CONN_N
C6452 56PF 5% 25V NP0-C0G-CERM 01005 ROOM=B2B_DOCK

PP_CODEC_TO_LOWERMIC1_BIAS — FL6454 1500HM-25%-200MA-0.7DCR (01005, ROOM=B2B_DOCK) — PP_CODEC_TO_LOWERMIC1_BIAS_CONN
C6454 220PF 5% 10V C0G-CERM 01005 ROOM=B2B_DOCK

LOWERMIC4_TO_CODEC_AIN4_P — FL6460 1500HM-25%-200MA-0.7DCR (01005, ROOM=B2B_DOCK) — LOWERMIC4_TO_CODEC_AIN4_CONN_P 尾插蜂噪麦克风到大音频信号输入 正
C6460 56PF 5% 25V NP0-C0G-CERM 01005 ROOM=B2B_DOCK

LOWERMIC4_TO_CODEC_AIN4_N — FL6462 1500HM-25%-200MA-0.7DCR (01005, ROOM=B2B_DOCK) — LOWERMIC4_TO_CODEC_AIN4_CONN_N
C6462 56PF 5% 25V NP0-C0G-CERM 01005 ROOM=B2B_DOCK

PP_CODEC_TO_LOWERMIC4_BIAS — FL6464 1500HM-25%-200MA-0.7DCR (01005, ROOM=B2B_DOCK) — PP_CODEC_TO_LOWERMIC4_BIAS_CONN
C6464 220PF 5% 10V C0G-CERM 01005 ROOM=B2B_DOCK

DOCK FLEX CONNECTOR

APN: 516S00276

ROOM=B2B_DOCK CRITICAL
J6400 BB35L-RA50-3A F-ST-SM

Pin	Signal	Note
1	PP3V0_LAT_CONN	3V供电
2	SPKRAMP_BOT_TO_COIL_OUT_NEG	到尾插的铃声驱动信号输出 负
3	LOWERMIC4_TO_CODEC_BIAS_FILT_RET	尾插副麦克风偏压
4	COIL_TO_SPKRAMP_BOT_VSENSE_CONN_N	到尾插的铃声驱动信号电流检测 负
5	LOWERMIC1_TO_CODEC_AIN1_CONN_N	尾插主麦克风到大音频信号输入 负
6	BB_TO_LAT_GPO1_CONN	
7	LOWERMIC1_TO_CODEC_AIN1_CONN_P	尾插主麦克风到大音频信号输入 正
8	BB_TO_LAT_GPO2_CONN	
9	PP_CODEC_TO_LOWERMIC1_BIAS_CONN	尾插副麦克风偏压
10	LOWERMIC4_TO_CODEC_AIN4_BIAS_CONN	尾插副麦克风偏压
11	PP_CODEC_TO_LOWERMIC1_BIAS_CONN	尾插副麦克风偏压
12	LOWERMIC4_TO_CODEC_AIN4_CONN_P	尾插蜂噪麦克风到大音频信号输入 正
13	I2C1_AP_TO_MIC1_SCL_CONN	I2C总线
14	LOWERMIC4_TO_CODEC_AIN4_CONN_N	尾插蜂噪麦克风到大音频信号输入 负
15	I2C1_AP_BI_MIC1_SDA_CONN	I2C总线
16	LOWERMIC1_TO_CODEC_BIAS_FILT_RET	尾插副麦克风偏压
17	MIKEYBUS_REFERENCE	MIKEY总线基准
18	MIKEYBUS_REFERENCE	MIKEY总线基准
19	90_HYDRA_DP2_CONN_P	尾插到USB的数据线
20	BB_TO_LAT_GPO4_CONN	
21	90_HYDRA_DP2_CONN_N	尾插到USB的数据线
22		
23	90_HYDRA_DP1_CONN_P	尾插到USB的数据线
24	BB_TO_LAT_GPO3_CONN	
25	90_HYDRA_DP1_CONN_N	尾插到USB的数据线
26	HYDRA_CON_DETECT_CONN_L	尾插插入检测
27	LAT_TUNER_RFFE1_DATA_CONN	到基带的RFFE总线
28	LAT_TUNER_RFFE1_DATA_CONN	到基带的RFFE总线
29	LAT_TUNER_RFFE1_CLK_CONN	到基带的RFFE总线
30	LAT_TUNER_RFFE1_CLK_CONN	到基带的RFFE总线
31	PP_HYDRA_ACC1_CONN	附件检测
32	PP1V8_LAT_ARC_CONN	1.8V供电
33	PP_HYDRA_ACC1_CONN	附件检测
34	SOLENOID1_TO_ARC1_VSENSE_N	震动驱动信号电压检测 负
35	PP_HYDRA_ACC2_CONN	附件检测
36	SOLENOID1_TO_ARC1_VSENSE_P	震动驱动信号电压检测 正
37	PP_HYDRA_ACC2_CONN	附件检测
38	I2C3_AP_BI_SAKONNET_SDA_CONN	I2C总线
39	ARC1_TO_SOLENOID1_OUT_NEG	到震动的驱动信号输出 负
40	I2C3_AP_TO_SAKONNET_SCL_CONN	I2C总线
41	I2S_AOP_AMPS_TO_CODEC_ASP1_DOUT_CONN	音频到CPU的I2S总线数据输入信号
42	I2S_AOP_AMPS_TO_CODEC_ASP1_DOUT_CONN	音频到CPU的I2S总线数据输入信号
43	ARC1_TO_SOLENOID1_OUT_POS	到震动的驱动信号输出 正
44		
45	ARC1_TO_SOLENOID1_OUT_POS	到震动的驱动信号输出 正
46	COIL_TO_SPKRAMP_BOT_VSENSE_CONN_P	到尾插的铃声驱动信号电流检测 正
47	I2S_CODEC_ASP1_TO_AOP_AMPS_LRCLK_CONN	音频到CPU的I2S总线数据输入信号
48	SPKRAMP_BOT_TO_COIL_OUT_POS	到尾插的铃声驱动信号输出 正
49	I2S_CODEC_ASP1_TO_AOP_AMPS_BCLK_CONN	音频到CPU的I2S总线数据输入信号
50	SPKRAMP_BOT_TO_COIL_OUT_POS	到尾插的铃声驱动信号输出 正
51		
52		
53	PP_VBUS1_F75	充电电压输入 VOLTAGE=16.0V
54		
55		
56		

C6490 0.1UF 10% 25V X5R 0201 ROOM=CHARGER
C6491 0.1UF 10% 25V X5R 0201 ROOM=CHARGER
C6492 0.1UF 10% 25V X5R 0201 ROOM=B2B_DOCK
C6493 220PF 5% 25V C0G 01005 ROOM=B2B_DOCK
C6494 0.1UF 10% 25V X5R 0201 ROOM=B2B_DOCK
C6496 0.1UF 10% 25V X5R 0201 ROOM=B2B_DOCK

#30797674: Update C6496/C6494 per EMC/Desense feedback
#30657902: Update C6494 to 0.1uF per EMC/Desense

SOUTH SPEAKER

COIL_TO_SPKRAMP_BOT_VSENSE_P — FL6480 1500HM-25%-200MA-0.7DCR (01005, ROOM=B2B_DOCK) — COIL_TO_SPKRAMP_BOT_VSENSE_CONN_P
NOSTUFF C6480 220PF 5% 10V C0G-CERM 01005 ROOM=B2B_DOCK

COIL_TO_SPKRAMP_BOT_VSENSE_N — FL6482 1500HM-25%-200MA-0.7DCR (01005, ROOM=B2B_DOCK) — COIL_TO_SPKRAMP_BOT_VSENSE_CONN_N
NOSTUFF C6482 220PF 5% 10V C0G-CERM 01005 ROOM=B2B_DOCK

#29332151: No-stuff C6480 and C6482

SPKRAMP_BOT_TO_COIL_OUT_POS
SPKRAMP_BOT_TO_COIL_OUT_NEG
C6488 1000PF 10% 10V X6S 01005 ROOM=B2B_DOCK
C6489 1000PF 10% 10V X6S 01005 ROOM=B2B_DOCK

I2C1_AP_SCL — R6456 0.00 (0% 1/32W MF 01005 ROOM=B2B_DOCK) — I2C1_AP_TO_MIC1_SCL_CONN
C6456 56PF 5% 25V NP0-C0G-CERM 01005 ROOM=B2B_DOCK

I2C1_AP_SDA — R6466 0.00 (0% 1/32W MF 01005 ROOM=B2B_DOCK) — I2C1_AP_BI_MIC1_SDA_CONN
C6466 56PF 5% 25V NP0-C0G-CERM 01005 ROOM=B2B_DOCK

www.xinxunwei.com 400-800-9990

I2C MAP

(see #28857723 updates)

Diags ID	Bus	Device	7-Bit Address	8-Bit Address	Device Max Speed	Operating Speed	Net Name
0	AP I2C0	**Agnes** (System PMU)	0x74	0xE8	400 Kbps	400 Kbps	I2C0_AP
		Chestnut (Display PMU)	0x27	0x4E	400 Kbps		
		AccessoryBuck	0x52	0xA4	400 Kbps		
		Muon (Backlight Controller 2)	0x62	0xC4	1 Mbps		
1	AP I2C1	**MIC1 Temp Sensor** (South)	0x54	0xA8	1 Mbps	100 Kbps	I2C1_AP
		MIC2 Temp Sensor (North Rear)	0x56	0xAC	1 Mbps		
2	AP I2C2	**Adare** (Top Speaker Amp)	0x40	0x80	1 Mbps	1 Mbps	I2C2_AP
		Convoy (Top Speaker Cap Sense)	0x21	0x42	1 Mbps		
3	AP I2C3	**EEPROM**	0x51	0xA2	400 Kbps	400 Kbps	I2C3_AP
		Muon (Backlight Controller 1)	0x62	0xC4	400 Kbps		
		Sakonnet (Arc: Hall Effect Sensor)	0x08	0x10	1 Mbps		
		EEPROM	0x50	0xA0	400 Kbps		
	ISP I2C0	**Casper** (Rear Wide Camera)	0x10	0x20	1 Mbps	1 Mbps	I2C0_ISP
		Grunberg+ (AF/OIS Wide Camera)	0x3C	0x78	1 Mbps		
	ISP I2C1	**Billings** (Rear Tele Camera)	0x20	0x40	1 Mbps	1 Mbps	I2C1_ISP
		Edwin (AF Tele Camera)	0x0D	0x1A	1 Mbps		
	ISP I2C2	**Concord** (Front Camera)	0x10	0x20	1 Mbps	400 Kbps	I2C2_ISP
	ISP I2C3	**Neon** (Strobe - CW : LM3566)	0x63	0xC6	1 Mbps	400 Kbps	I2C3_ISP
		Ansel (Camera PMU)	0x40	0x80	1 Mbps		
		Neon (Strobe - AM : LM35662)	0x67	0xCE	1 Mbps		
	SEP I2C	**EEPROM**	0x51	0xA2	400 Kbps	400 Kbps	I2C4_AP
4	AOP I2C0	**Doppler** (Prox Sensor)	0x58	0xB0	1 Mbps	400 Kbps	I2C0_AOP
		CT709 (ALS : Firefish)	0x29	0x52	400 Kbps		
5	AOP I2C1	**Adare** (Bottom Speaker Amp)	0x40	0x80	1 Mbps	1 Mbps	I2C1_AOP
		Adare (Arc : Driver)	0x41	0x82	1 Mbps		
		Apache3 (Mesa Power Supply)	0x61	0xC2	1 Mbps		I2C1_AOP_ISO
		Turtle	0x2C	0x58	1 Mbps		
6	SMC I2C0	**Tigris2** (Charger)	0x71	0xE2	400 Kbps	400 Kbps	I2C0_SMC
		TPS61280 (VDD Boost)	0x75	0xEA	400 Kbps		
		CCG2 (USB PD)	0x12 (0x08)	0x24 (0x10)	1 Mbps		
		Iktara	0x39	0x72	400 Kbps		
		SN45546 (Gas Gauge)	0x55	0xAA	400 Kbps		
7	SMC I2C1	**Hydra**	0x1A	0x34	400 Kbps	400 Kbps	I2C1_SMC

www.xinxunwei.com 400-800-9990

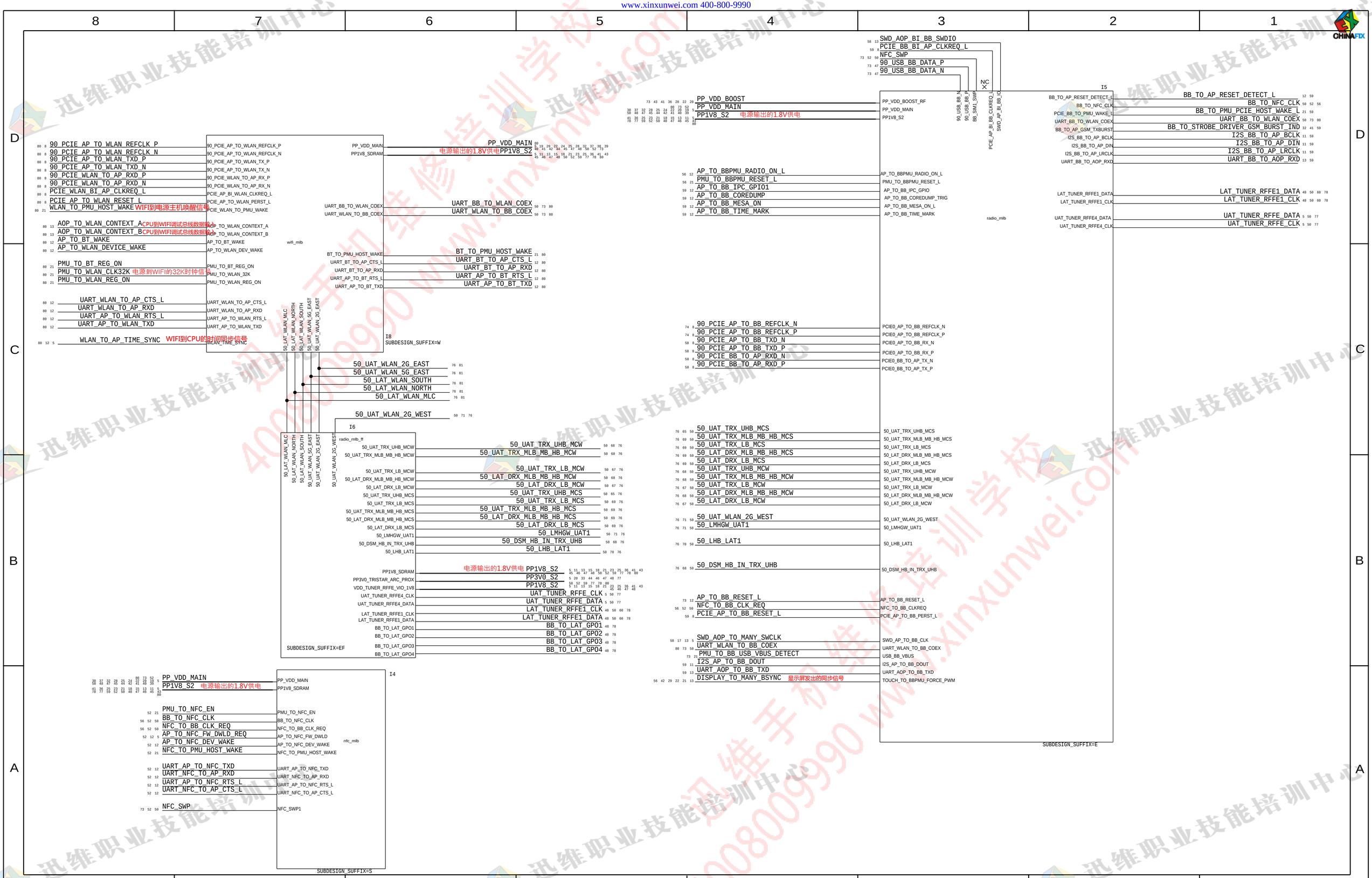

www.xinxunwei.com 400-800-9990

1. ALL RESISTANCE VALUES ARE IN OHMS, 0.1 WATT +/- 5%.
2. ALL CAPACITANCE VALUES ARE IN MICROFARADS.
3. ALL CRYSTALS & OSCILLATOR VALUES ARE IN HERTZ.

REV	ECN	DESCRIPTION OF REVISION	CK APPD / DATE
10	0008927012	ENGINEERING RELEASED	2017-06-06

NFC_MLB D20/D21
MAY 15, 2017

PART#	QTY	DESCRIPTION	REFERENCE DESIGNATOR(S)	CRITICAL	BOM OPTION
138S00159	3	CAP,SOFT TERM,2.2UF,6.3V,0201	C7500_S,C7502_S, C7505_S	CRITICAL	SOFT_CAP
138S0831	3	CAP,TYPICAL,2.2UF,6.3V,0201	C7500_S,C7502_S,C7505_S	CRITICAL	TYPICAL_CAP

52 50 IN PP_VDD_MAIN
52 50 IN PP1V8_S2 电源输出的1.8V供电

52 50 IN PMU_TO_NFC_EN 电源到NFC开启信号
52 50 OUT NFC_TO_PMU_HOST_WAKE NFC到电源主机唤醒信号
52 50 IN AP_TO_NFC_DEV_WAKE CPU发给NFC芯片的唤醒信号
52 50 IN AP_TO_NFC_FW_DWLD_REQ CPU到NFC的DWLD请求
52 50 OUT NFC_TO_BB_CLK_REQ NFC到基带时钟中断
52 50 IN BB_TO_NFC_CLK

52 50 IN UART_AP_TO_NFC_TXD
52 50 OUT UART_NFC_TO_AP_RXD
52 50 IN UART_AP_TO_NFC_RTS_L
52 50 OUT UART_NFC_TO_AP_CTS_L

52 50 IO NFC_SWP

PART#	QTY	DESCRIPTION	REFERENCE DESIGNATOR(S)	BOM OPTION
131S0882	1	390PF, 0201, 2%, 25V	C7514_S	D20_JPN
131S00026	1	820PF, 0201, 2%, 25V	C7515_S	D20_JPN
131S00033	1	680PF, 0201, 2%, 25V	C7516_S	D20_JPN
131S0883	1	220PF, 0201, 2%, 50V	C7518_S	D20_JPN
131S00025	1	1000PF, 0201, 2%, 25V	C7510_S	D20_JPN
131S00025	1	1000PF, 0201, 2%, 25V	C7513_S	D20_JPN
157S00022	1	TDK, BALUN, 11T	T7500_S	D20_JPN

PART#	QTY	DESCRIPTION	REFERENCE DESIGNATOR(S)	BOM OPTION
131S00138	1	39PF, 0201, 2%, 50V	C7512_S	D21_JPN
131S00081	1	270PF, 0201, 2%, 25V	C7514_S	D21_JPN
131S00025	1	1000PF, 0201, 2%, 25V	C7515_S	D21_JPN
131S00033	1	680PF, 0201, 2%, 25V	C7516_S	D21_JPN
131S00019	1	150PF, 0201, 2%, 50V	C7518_S	D21_JPN
131S00033	1	680PF, 0201, 2%, 25V	C7510_S	D21_JPN
131S00033	1	680PF, 0201, 2%, 25V	C7513_S	D21_JPN
157S00023	1	MURATA, BALUN, 11T	T7500_S	D21_JPN

PART#	QTY	DESCRIPTION	REFERENCE DESIGNATOR(S)	BOM OPTION
131S00138	1	39PF, 0201, 2%, 50V	C7512_S	D20_ROW
131S00016	1	470PF, 0201, 2%, 25V	C7514_S	D20_ROW
131S00025	1	1000PF, 0201, 2%, 25V	C7515_S	D20_ROW
131S0825	1	560PF, 0201, 2%, 25V	C7516_S	D20_ROW
131S0883	1	220PF, 0201, 2%, 50V	C7518_S	D20_ROW
131S00026	1	820PF, 0201, 2%, 25V	C7510_S	D20_ROW
131S00026	1	820PF, 0201, 2%, 25V	C7513_S	D20_ROW
157S00022	1	TDK, BALUN, 11T	T7500_S	D20_ROW

PART#	QTY	DESCRIPTION	REFERENCE DESIGNATOR(S)	BOM OPTION
131S00138	1	39PF, 0201, 2%, 50V	C7512_S	D21_ROW
131S00081	1	270PF, 0201, 2%, 25V	C7514_S	D21_ROW
131S00025	1	1000PF, 0201, 2%, 25V	C7515_S	D21_ROW
131S00033	1	680PF, 0201, 2%, 25V	C7516_S	D21_ROW
131S00019	1	150PF, 0201, 2%, 50V	C7518_S	D21_ROW
131S00033	1	680PF, 0201, 2%, 25V	C7510_S	D21_ROW
131S00033	1	680PF, 0201, 2%, 25V	C7513_S	D21_ROW
157S00023	1	MURATA, BALUN, 11T	T7500_S	D21_ROW

PART#	QTY	DESCRIPTION	REFERENCE DESIGNATOR(S)	BOM OPTION
131S00138	1	39PF, 0201, 2%, 50V	C7512_S	D201
131S00016	1	470PF, 0201, 2%, 25V	C7514_S	D201
131S00025	1	1000PF, 0201, 2%, 25V	C7515_S	D201
131S0825	1	560PF, 0201, 2%, 25V	C7516_S	D201
131S0883	1	220PF, 0201, 2%, 50V	C7518_S	D201
131S00026	1	820PF, 0201, 2%, 25V	C7510_S	D201
131S00026	1	820PF, 0201, 2%, 25V	C7513_S	D201
157S00022	1	TDK, BALUN, 11T	T7500_S	D201

PART#	QTY	DESCRIPTION	REFERENCE DESIGNATOR(S)	BOM OPTION
131S00138	1	39PF, 0201, 2%, 50V	C7512_S	D211
131S00081	1	270PF, 0201, 2%, 25V	C7514_S	D211
131S00025	1	1000PF, 0201, 2%, 25V	C7515_S	D211
131S00033	1	680PF, 0201, 2%, 25V	C7516_S	D211
131S00019	1	150PF, 0201, 2%, 50V	C7518_S	D211
131S00033	1	680PF, 0201, 2%, 25V	C7510_S	D211
131S00033	1	680PF, 0201, 2%, 25V	C7513_S	D211
157S00023	1	MURATA, BALUN, 11T	T7500_S	D211

www.xinxunwei.com 400-800-9990

STOCKHOLM

NFC CONTROLLER

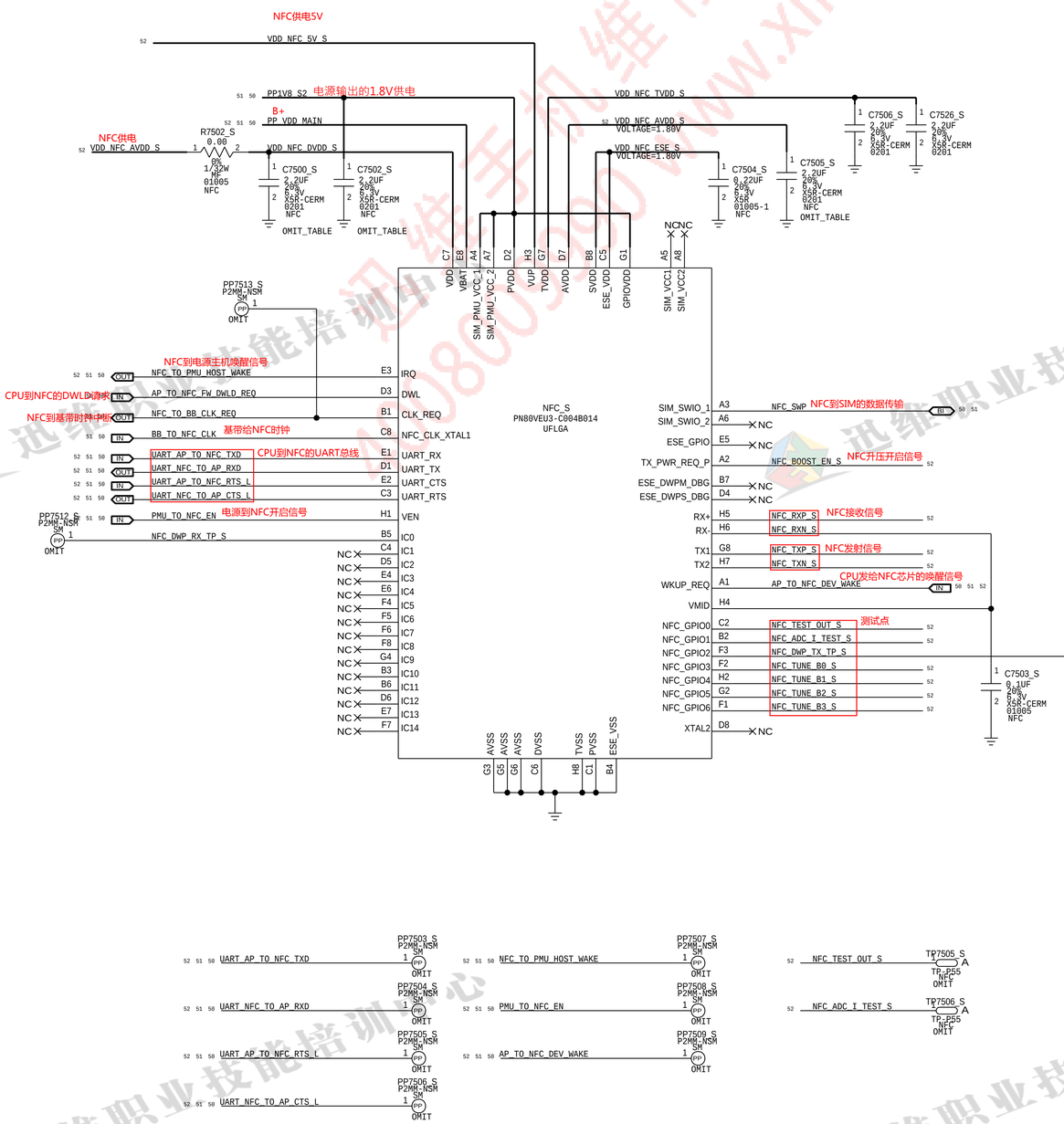

5V BOOSTER

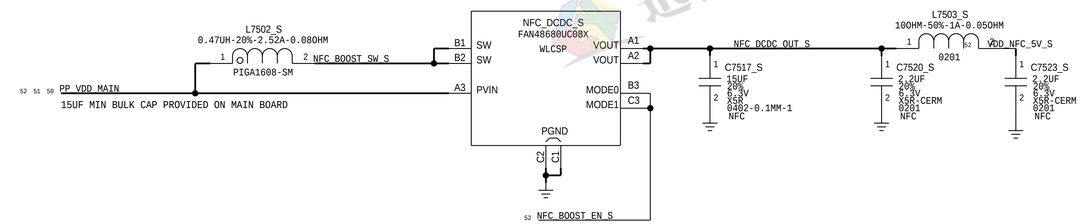

NFC FRONT END

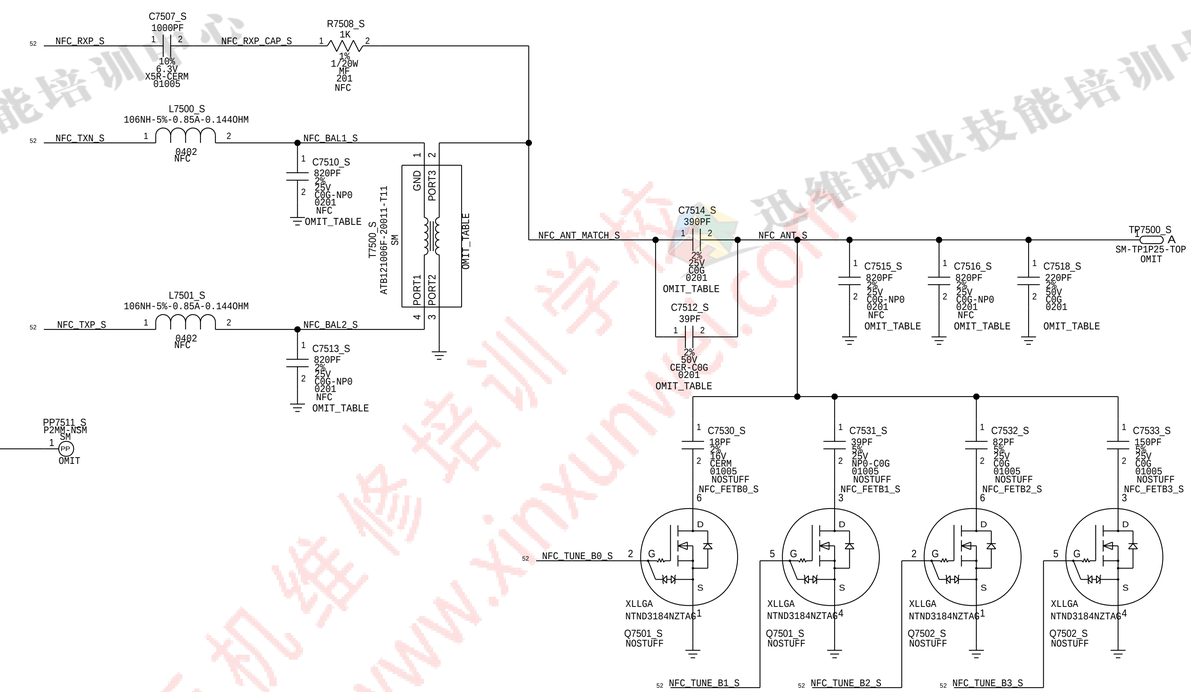

www.xinxunwei.com 400-800-9990

1. ALL RESISTANCE VALUES ARE IN OHMS, 0.1 WATT +/- 5%.
2. ALL CAPACITANCE VALUES ARE IN MICROFARADS.
3. ALL CRYSTALS & OSCILLATOR VALUES ARE IN HERTZ.

CONFIDENTIAL AND PROPRIETARY APPLE SYSTEM DESIGN. FOR REFERENCE ONLY - NOT A CHANGE REQUEST

REV	ECN	DESCRIPTION OF REVISION	CK APPD / DATE
10	0008927012	ENGINEERING RELEASED	2017-06-06

(MAV17.2/3)
D21 RADIO_MLB
06/06/2017
0.122.0

LAST_MODIFICATION=Tue Jun 6 18:57:01 2017

PAGE	CSA	CONTENTS	SYNC	DATE
53	1	FRONT PAGE		
54	2	HIERARCHY		
55	3	PMIC: BUCKS & LDOS		
56	4	PMIC: CLOCKS & CONTROL 基带电源输出		
57	5	BB: POWER 基带CPU供电部分		
58	6	BB: CONTROL & HS PERIPHERALS [6] 基带芯片		
59	7	BB: GPIOS & QLINK 基带芯片		
60	8	XCVR 射频芯片		
61	9	XCVR 射频芯片		
62	10	QPOET MODULE 功放供电		
63	11	LB PAD 低频功放		
64	12	HB PAD 高频功放		
65	13	UHB PAD 超高频功放		
66	14	2G PA 2G功放		
67	15	LB DSM 低频分集接收器		
68	16	HB DSM 高频分集接收器		
69	17	COUPLER2 耦合器		
70	18	LOWER ANTENNA 天线		
71	19	UPPER ANTENNA		
72	20	GNSS GPS		
73	21	SIM, DEBUG CONN SIM卡，诊断接口		
74	22	TEST POINTS 测试点	PROBE POINTS	07/18/2016

ALTERNATES

PART NUMBER	ALTERNATE FOR PART NUMBER	REFERENCE DESIGNATOR(S)	DESCRIPTION	BOM OPTION
335S00013	335S0894	U_EEPROM_E	IC, EEPROM	BOM_TABLE_ALTS
197S00093	197S00065	Y401_E	XTAL, 38P4MHZ	BOM_TABLE_ALTS
197S00067	197S00065	Y401_E	XTAL, 38P4MHZ	BOM_TABLE_ALTS
353S01287	353S01109	U_QET_E	ET MODULE, QPOET	BOM_TABLE_ALTS

SCH #: 951-03059
PCB #: 920-02293
BOM #: 939-02493

www.xinxunwei.com 400-800-9990

POWER

21 10 3 IN PP_VDD_MAIN

IN PP_VDD_BOOST = PP_VDD_BOOST 3 21
MAKE_BASE=TRUE

21 4 IN AP_TO_BB_RESET_L
4 IN PMU_TO_BBPMU_RESET_L
4 IN AP_TO_BBPMU_RADIO_ON_L

AOP

22 7 IN UART_AOP_TO_BB_TXD
22 7 OUT UART_BB_TO_AOP_RXD

22 7 OUT BB_TO_STROBE_DRIVER_GSM_BURST_IND

21 7 OUT UART_BB_TO_WLAN_COEX
21 7 IN UART_WLAN_TO_BB_COEX

22 7 IN AP_TO_BB_COREDUMP
7 IO AP_TO_BB_IPC_GPIO1
22 7 IN AP_TO_BB_MESA_ON

22 7 OUT BB_TO_AP_RESET_DETECT_L

22 7 IN AP_TO_BB_TIME_MARK

22 4 IN DISPLAY_TO_MANY_BSYNC 显示屏发出的同步信号

7 IN PP1V8_S2 电源输出的1.8V供电

RF SIGNALS

13 IO 50_UAT_TRX_UHB_MCS
17 IO 50_UAT_TRX_MLB_MB_HB_MCS
17 IO 50_UAT_TRX_LB_MCS
17 IO 50_LAT_DRX_MLB_MB_HB_MCS
17 IO 50_LAT_DRX_LB_MCS
16 IO 50_UAT_TRX_UHB_MCW
16 IO 50_UAT_TRX_MLB_MB_HB_MCW
15 IO 50_UAT_TRX_LB_MCW
16 IO 50_LAT_DRX_MLB_MB_HB_MCW
15 IO 50_LAT_DRX_LB_MCW

19 IO 50_UAT_WLAN_2G_WEST
19 IO 50_LMHGW_UAT1

18 IO 50_LHB_LAT1
19 16 IO 50_DSM_HB_IN_TRX_UHB

PCIE

22 6 IN 90_PCIE_AP_TO_BB_REFCLK_P
22 6 IN 90_PCIE_AP_TO_BB_REFCLK_N

6 IN 90_PCIE_AP_TO_BB_TXD_P
6 IN 90_PCIE_AP_TO_BB_TXD_N

6 OUT 90_PCIE_BB_TO_AP_RXD_P
6 OUT 90_PCIE_BB_TO_AP_RXD_N

7 IN PCIE_AP_TO_BB_RESET_L
7 IO PCIE_BB_BI_AP_CLKREQ_L
7 OUT BB_TO_PMU_PCIE_HOST_WAKE_L

TUNER/DOCK

MAKE_BASE=TRUE

OUT UAT_TUNER_RFFE_CLK = UAT_TUNER_RFFE_CLK 7
IO UAT_TUNER_RFFE_DATA = UAT_TUNER_RFFE_DATA 7
8 7 OUT LAT_TUNER_RFFE1_CLK = MAKE_BASE=TRUE
8 7 IO LAT_TUNER_RFFE1_DATA

STOCKHOLM

21 IO NFC_SWP

4 IN NFC_TO_BB_CLK_REQ
22 4 OUT BB_TO_NFC_CLK

SWD/USB

6 IN SWD_AOP_TO_MANY_SWCLK
6 IO SWD_AOP_BI_BB_SWDIO
21 4 IN PMU_TO_BB_USB_VBUS_DETECT
21 6 IO 90_USB_BB_DATA_P
21 6 IO 90_USB_BB_DATA_N

AUDIO

22 7 OUT I2S_BB_TO_AP_BCLK
22 7 OUT I2S_BB_TO_AP_LRCLK
22 7 IN I2S_AP_TO_BB_DOUT
22 7 OUT I2S_BB_TO_AP_DIN

www.xinxunwei.com 400-800-9990

RF PMIC: SWITCHERS & LDOS

CONFIDENTIAL AND PROPRIETARY APPLE SYSTEM DESIGN. FOR REFERENCE ONLY - NOT A CHANGE REQUEST

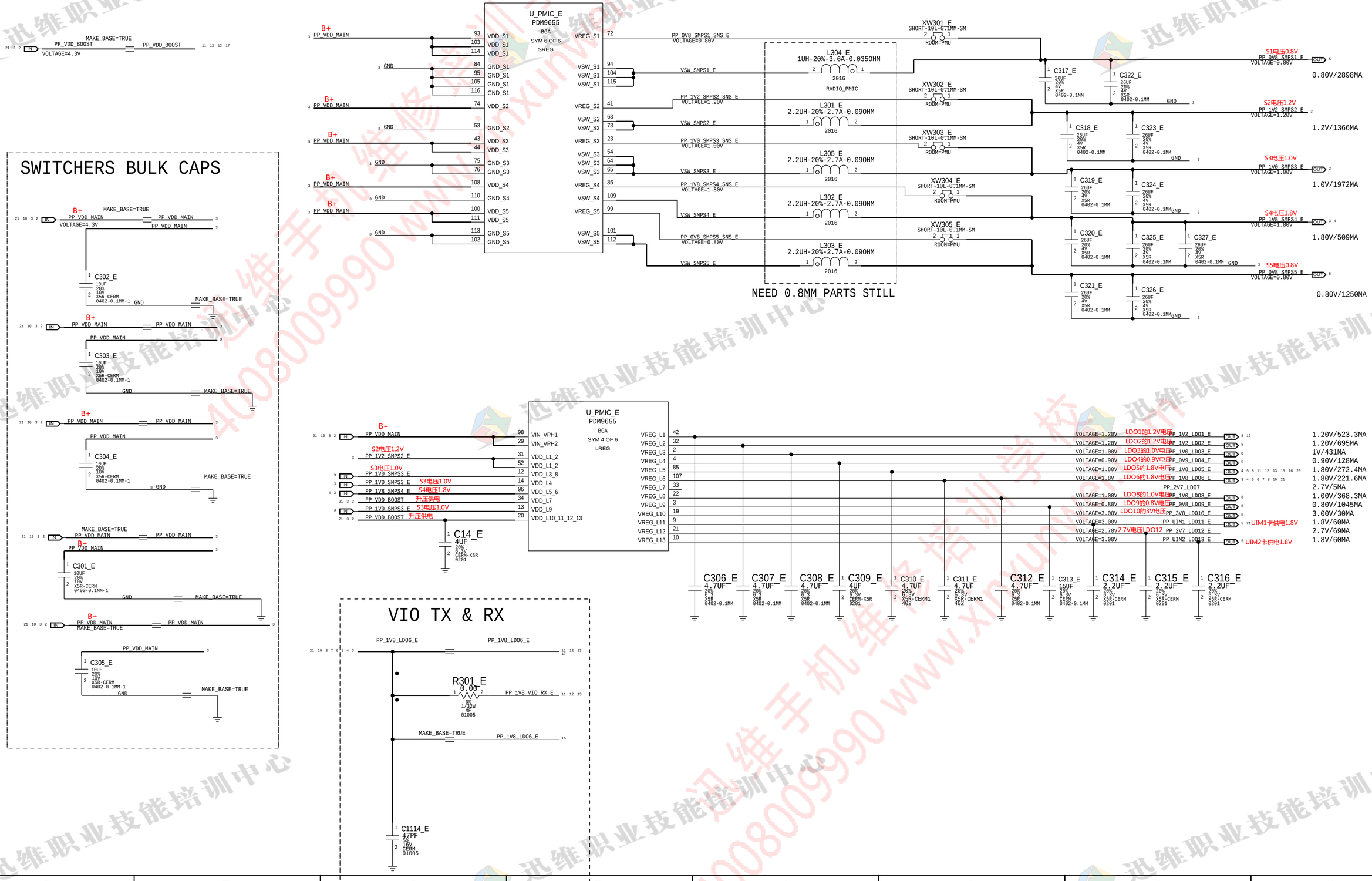

www.xinxunwei.com 400-800-9990

RF PMIC: XTAL, CLOCKS AND MISCELLANEOUS

HW_REV_ID	R407	R408	MLB/RADIO_DEV
<0.10V	NOSTUFF	51.1K	T500/DEV1
0.15V-0.25V	422K	51.1K	PROTO1.5
0.35V-0.45V	180K	51.1K	PROTO2.5/DEV2
0.55V-0.65V	105K	51.1K	PROTO1/DEV3
0.75V-0.85V	66.5K	51.1K	PROTO2/DEV4
0.95V-1.05V	44.2K	51.1K	EVT
1.15V-1.25V	28K	51.1K	CARRIER/DEV5
1.35V-1.45V	16.5K	51.1K	DVT/DEV6
1.55V-1.65V	7.87K	51.1K	PVT/DEV7
1.75V-1.85V	10K	NOSTUFF	SPARE

NOTE XTAL SYMBOL MIRRORED COMPARED TO PREVIOUS SCH

PA_THERM2	R409	R410	PRODUCT TYPE	Y
0.00V-0.10V	NOSTUFF	51.1K	RADIO DEV	1
0.15V-0.25V	422K	51.1K	3RD TYPE	2
0.35V-0.45V	180K	51.1K	POR MLB (FF)	3
0.55V-0.65V	105K	51.1K	SPARE	4
0.75V-0.85V	66.5K	51.1K	SPARE	5
0.95V-1.05V	44.2K	51.1K	SPARE	6
1.15V-1.25V	28K	51.1K	SPARE	7
1.35V-1.45V	16.5K	51.1K	SPARE	8
1.55V-1.65V	7.87K	51.1K	SPARE	9
1.75V-1.85V	10K	NOSTUFF	SPARE	A

JPN_ROW_SEL	R430	R431	MAV PLATFORM	Y	SKU
<0.10V	NOSTUFF	51.1K	MAV17.0	0	ROW
0.15V-0.25V	422K	51.1K	MAV17.1	1	JPN
0.35V-0.45V	180K	51.1K	MAV17.2	2	ROW
0.55V-0.65V	105K	51.1K	MAV17.3	3	JPN
0.75V-0.85V	66.5K	51.1K	MAV17.4	4	ROW
0.95V-1.05V	44.2K	51.1K	MAV17.5	5	JPN
1.15V-1.25V	28K	51.1K	MAV17.6	6	ROW
1.35V-1.45V	16.5K	51.1K	MAV17.7	7	JPN
1.55V-1.65V	7.87K	51.1K	MAV17.8	8	ROW
1.75V-1.85V	10K	NOSTUFF	MAV17.9	9	JPN

PART#	QTY	DESCRIPTION	REFERENCE DESIGNATOR(S)	CRITICAL	BOM OPTION
118S0686	1	RESISTOR, 01005, 105K OHMS	R430_E	CRITICAL	JPN
117S0197	1	RESISTOR, 01005, 180K OHMS	R430_E	CRITICAL	ROW

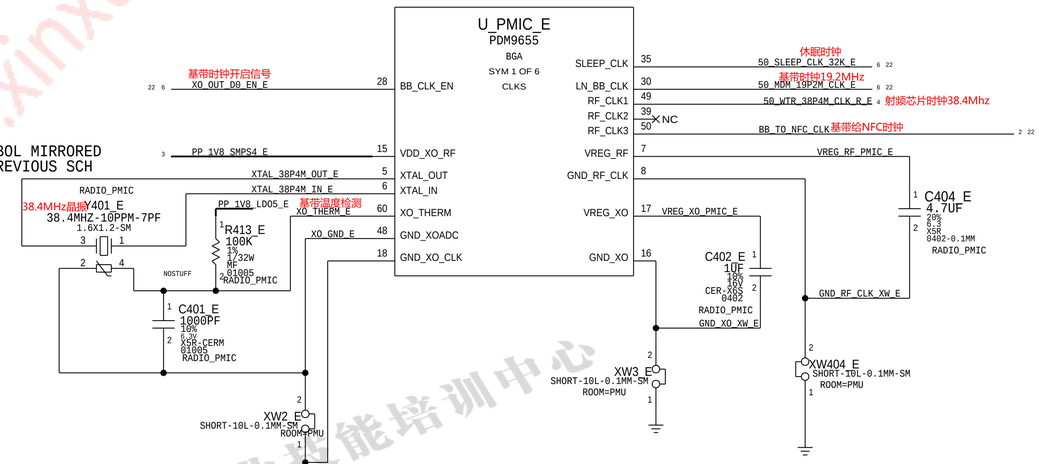

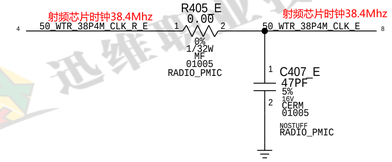

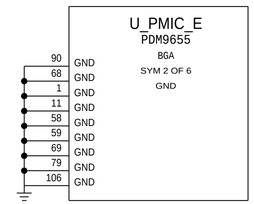

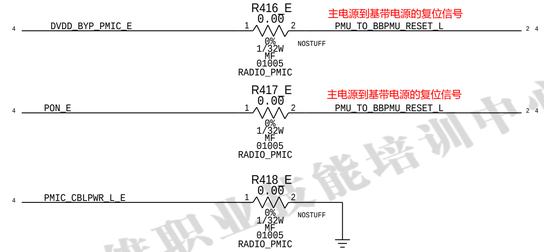

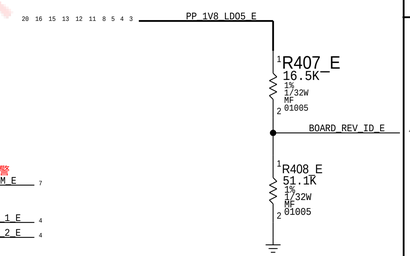

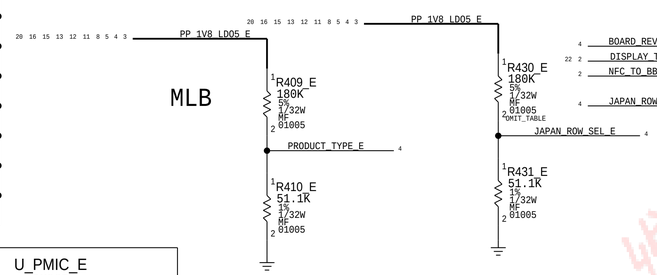

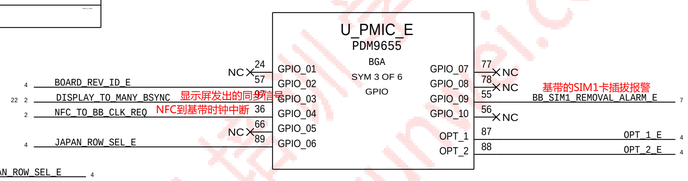

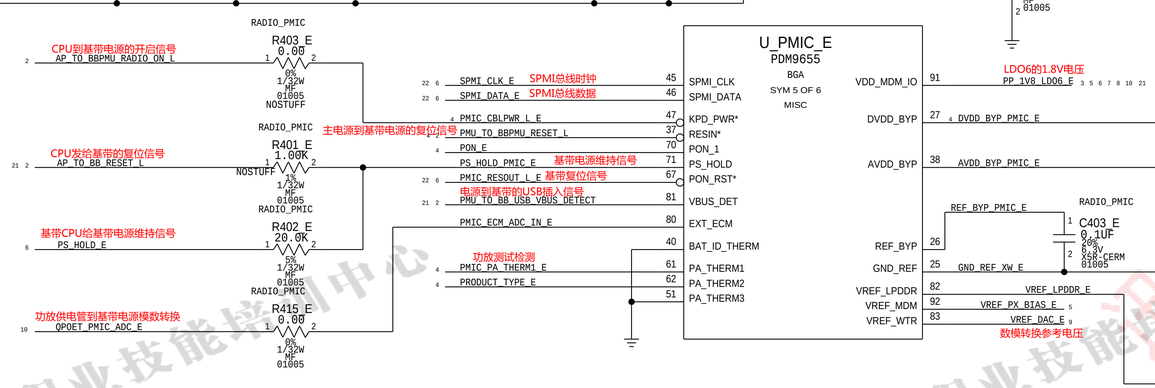

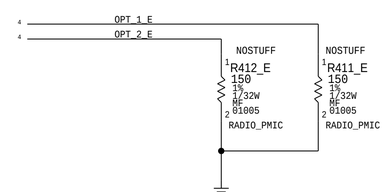

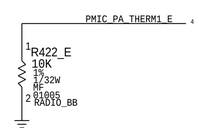

CONFIDENTIAL AND PROPRIETARY APPLE SYSTEM DESIGN. FOR REFERENCE ONLY - NOT A CHANGE REQUEST

www.xinxunwei.com 400-800-9990

CONFIDENTIAL AND PROPRIETARY APPLE SYSTEM DESIGN. FOR REFERENCE ONLY - NOT A CHANGE REQUEST

BB:POWER

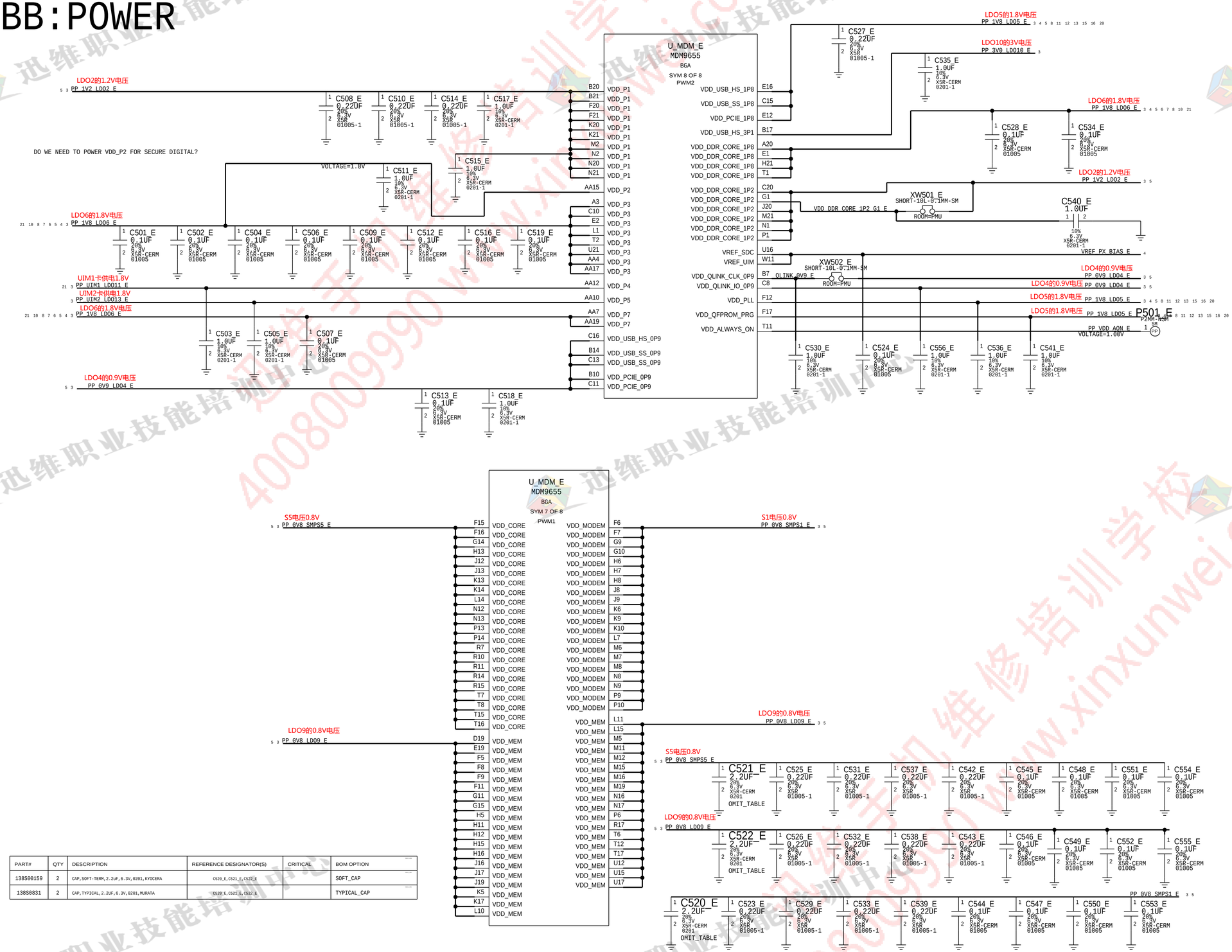

PART#	QTY	DESCRIPTION	REFERENCE DESIGNATOR(S)	CRITICAL	BOM OPTION
138S00159	2	CAP,SOFT-TERM,2.2uF,6.3V,0201,KYOCERA	C520_E,C521_E,C522_E		SOFT_CAP
138S0831	2	CAP,TYPICAL,2.2uF,6.3V,0201,MURATA	C520_E,C521_E,C522_E		TYPICAL_CAP

www.xinxunwei.com 400-800-9990

BB: CONTROL & HS PERIPHERALS

90_PCIE_AP_TO_BB_REFCLK_P OUT 2 6 22
90_PCIE_AP_TO_BB_REFCLK_N OUT 2 6 22
90_PCIE_AP_TO_BB_TXD_P OUT 2 6
90_PCIE_AP_TO_BB_TXD_N OUT 2 6
90_PCIE_BB_TO_AP_RXD_P OUT 2 6
90_PCIE_BB_TO_AP_RXD_N OUT 2 6

CPU到基带PCIE总线参考时钟

90_PCIE_AP_TO_BB_REFCLK_P — MAKE_BASE=TRUE — 90_PCIE_AP_TO_BB_REFCLK_P 2 6 22
90_PCIE_AP_TO_BB_REFCLK_N — MAKE_BASE=TRUE — 90_PCIE_AP_TO_BB_REFCLK_N 2 6 22
90_PCIE_AP_TO_BB_TXD_P — MAKE_BASE=TRUE — 90_PCIE_AP_TO_BB_TXD_P 2 6
90_PCIE_AP_TO_BB_TXD_N — MAKE_BASE=TRUE — 90_PCIE_AP_TO_BB_TXD_N 2 6
90_PCIE_BB_TO_AP_RXD_P — MAKE_BASE=TRUE — 90_PCIE_BB_TO_AP_RXD_P 2 6
90_PCIE_BB_TO_AP_RXD_N — MAKE_BASE=TRUE — 90_PCIE_BB_TO_AP_RXD_N 2 6

基带到CPU的PCIE通信总线

基带到USB芯片的USB总线

21 2 90_USB_BB_DATA_P — E17 USB_HS_DP
21 2 90_USB_BB_DATA_N — C17 USB_HS_DM

U_MDM_E
MDM9655
BGA
SYM 1 OF 8
USB_PCIE
RADIO_BB

PCIE_REFCLK_P E13 — 90_PCIE_AP_TO_BB_REFCLK_P IN 6
PCIE_REFCLK_M E14 — 90_PCIE_AP_TO_BB_REFCLK_N IN 6

CPU到基带PCIE总线参考时钟

PCIE_TX_P A11 — 90_PCIE_BB_TO_AP_RXD_P OUT 6
PCIE_TX_M B11 — 90_PCIE_BB_TO_AP_RXD_N OUT 6

基带到CPU的PCIE通信总线

PCIE_RX_P A9 — 90_PCIE_AP_TO_BB_TXD_P IN 6
PCIE_RX_M B9 — 90_PCIE_AP_TO_BB_TXD_N IN 6

基带到CPU的PCIE通信总线

PCIE_REXT A10 — PCIE_CAL_RES_E — R603_E 100 1% 1/32W MF 01005 RADIO_BB

NC B13 USB_SS_TX_P
NC A13 USB_SS_TX_M
NC A15 USB_SS_RX_P
NC B15 USB_SS_RX_M
NC B12 NC
A14 USB_SS_REXT — SS_CAL_RES_E — R601_E 100 1% 1/32W MF 01005 RADIO_BB
A17 USB_HS_REXT — BB_USB_HS_TXRTUNE_E — R602_E 4.02K 1% 1/32W MF 01005 RADIO_BB

基带缓存参考电压

BB_VREF_LPDDR2_E — C603_E 0.1UF 20% 6.3V X5R-CERM 01005 RADIO_BB

U_MDM_E
MDM9655
BGA
SYM 6 OF 8
MEMORY

N5 VREF_LPDDR2
K19 VREF_DQ0
H17 VREF_DQ1
VREF_DQ_BDM H19
BDM_ZQ D2 — BB_BDM_ZQ_E
EBI1_CAL P5 — BB_EBI1_CAL_E

R604_E 240 1% 1/32W MF 01005 RADIO_BB
R605_E 240 1% 1/32W MF 01005 RADIO_BB

P601_E
P2MM-TSM
SM
PP 1

U_MDM_E
MDM9655
BGA
SYM 3 OF 8
CONTORL

休眠时钟

22 4 50_SLEEP_CLK_32K_E — Y2 SLEEP_CLK
基带时钟开启信号 22 4 XO_OUT_D0_EN_E — L2 CXO_EN
基带时钟19.2MHz 22 4 50_MDM_19P2M_CLK_E — E11 CXO
21 BB_JTAG_RST_L_E — V20 SRST*
22 4 PMIC_RESOUT_L_E — 基带复位信号 P3 RESIN*
NC R2 MODE_0
NC R3 MODE_1
21 6 BB_JTAG_TCK_E — U13 TCK
BB_JTAG_TRST_L_E — W14 TRST*
21 6 BB_JTAG_TMS_E — Y12 TMS
NC U14 TDI
NC U13 TDO

RESOUT* N3 NC
PS_HOLD M3 — 基带CPU给基带电源维持信号 PS_HOLD_E 4
SDC1_CLK Y16 NC
SDC1_CMD Y14 NC
SDC1_DATA_0 W15 NC
SDC1_DATA_1 Y15 NC
SDC1_DATA_2 AA16 NC
SDC1_DATA_3 W16 NC
SPMI_CLK Y13 — SPMI总线时钟 SPMI_CLK_E 4 22
SPMI_DATA AA13 — SPMI_DATA_E 4 22 — SPMI总数据

LDO的1.8V电压

21 10 8 7 5 4 3 — PP_1V8_LDO6_E

NOTE: NO STUFF BUFFER FOR EUREKA CONFIG

U2_E
74AUP1G34GX
SOT1226
NC

NOSTUFF
R606_E 0.00 5% 1/32W MF 01005 RADIO_PMIC
2 SWD_AOP_TO_MANY_SWCLK — BB_JTAG_TCK_E 6 21

R607_E 0.00 5% 1/32W MF 01005 RADIO_PMIC
2 SWD_AOP_BI_BB_SWDIO — BB_JTAG_TMS_E 6 21

CONFIDENTIAL AND PROPRIETARY APPLE SYSTEM DESIGN. FOR REFERENCE ONLY - NOT A CHANGE REQUEST

www.xinxunwei.com 400-800-9990

BB:GPIOS & QLINK

CONFIDENTIAL AND PROPRIETARY APPLE SYSTEM DESIGN. FOR REFERENCE ONLY - NOT A CHANGE REQUEST

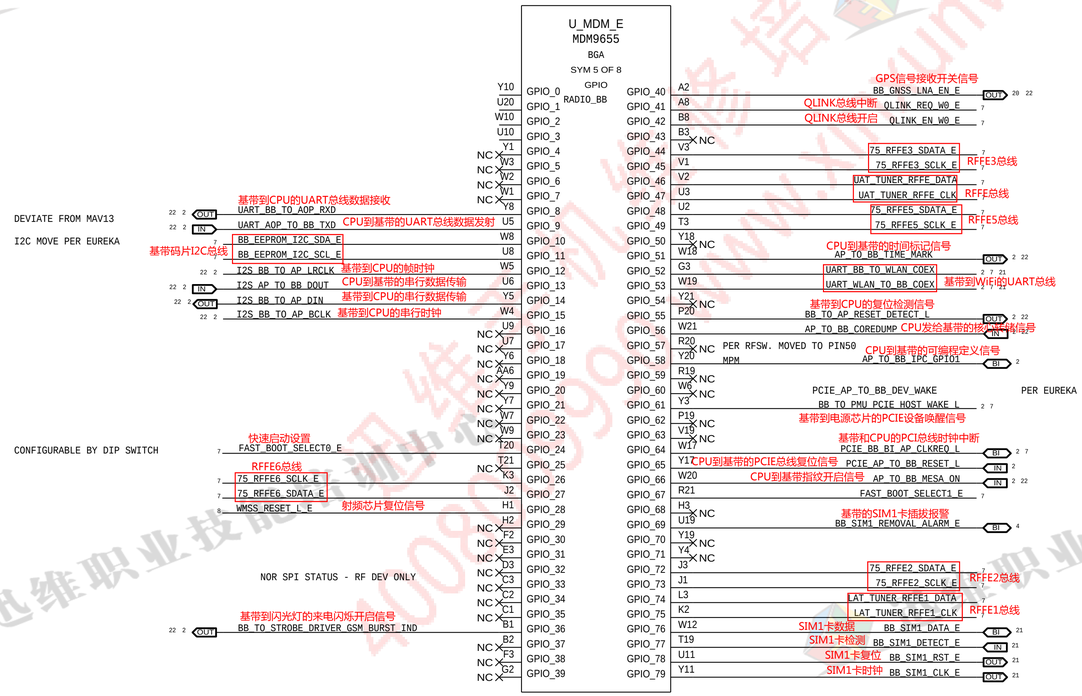

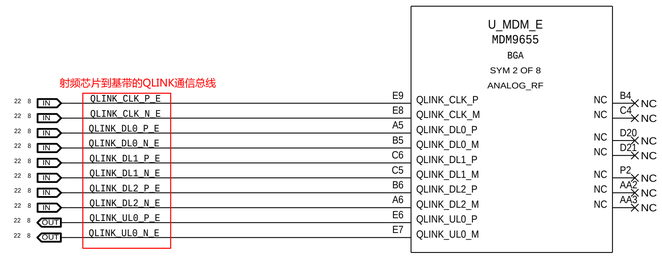

BB EEPROM

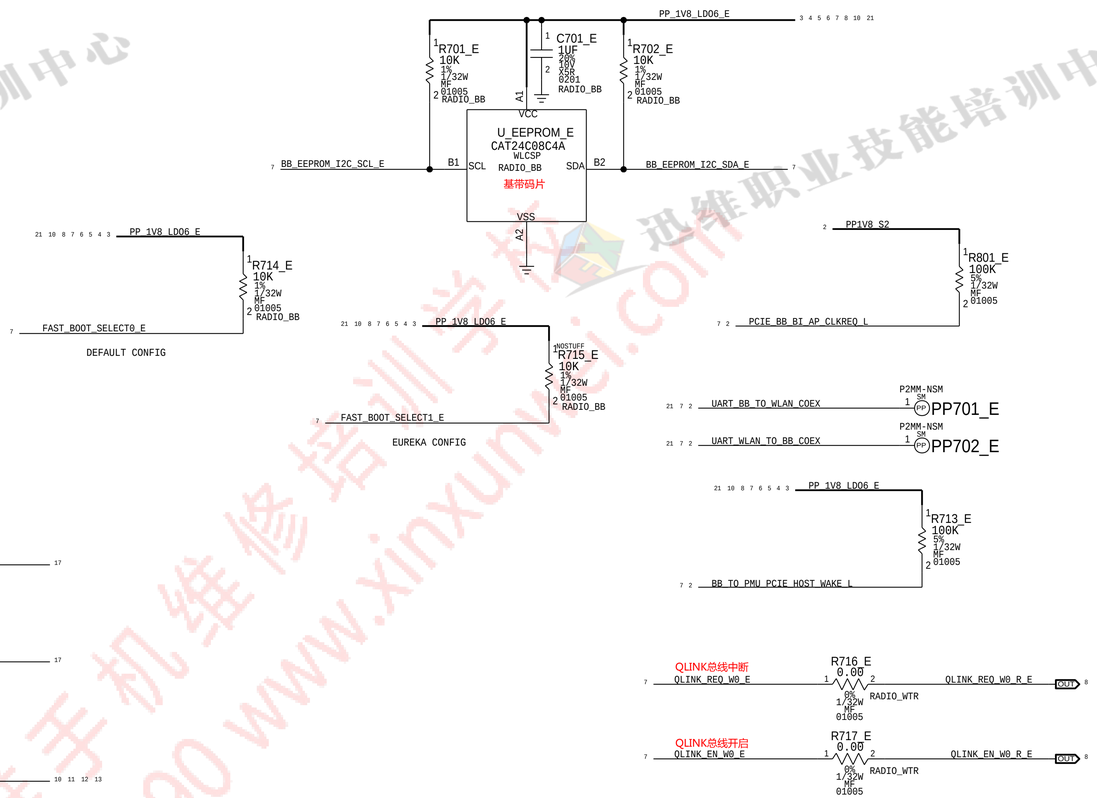

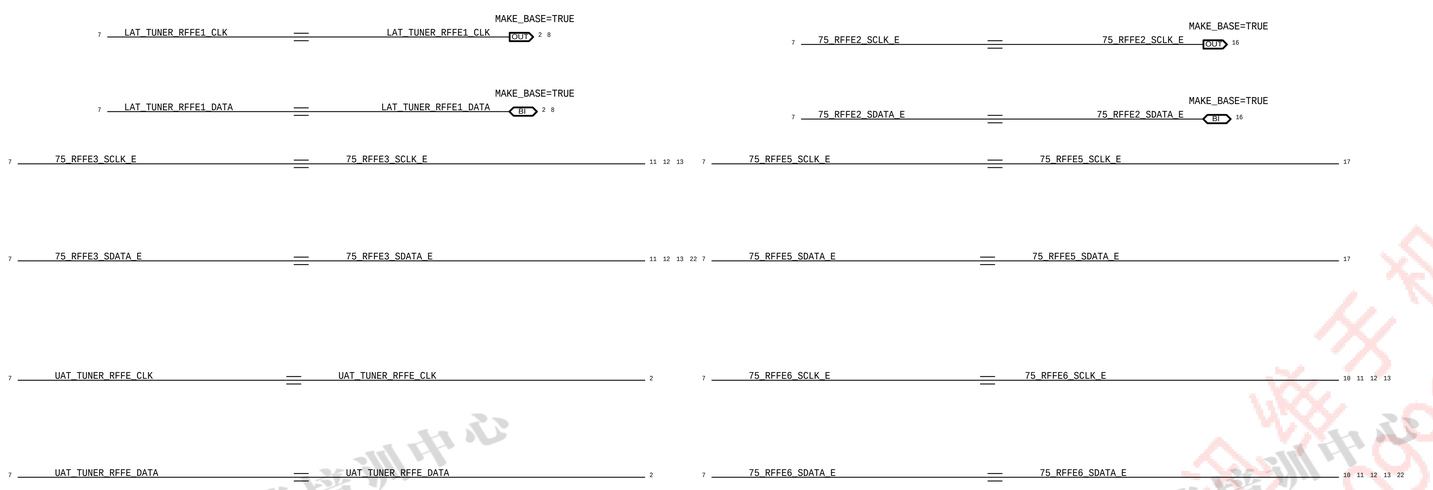

www.xinxunwei.com 400-800-9990

TRANSCEIVER: QLINK & POWER

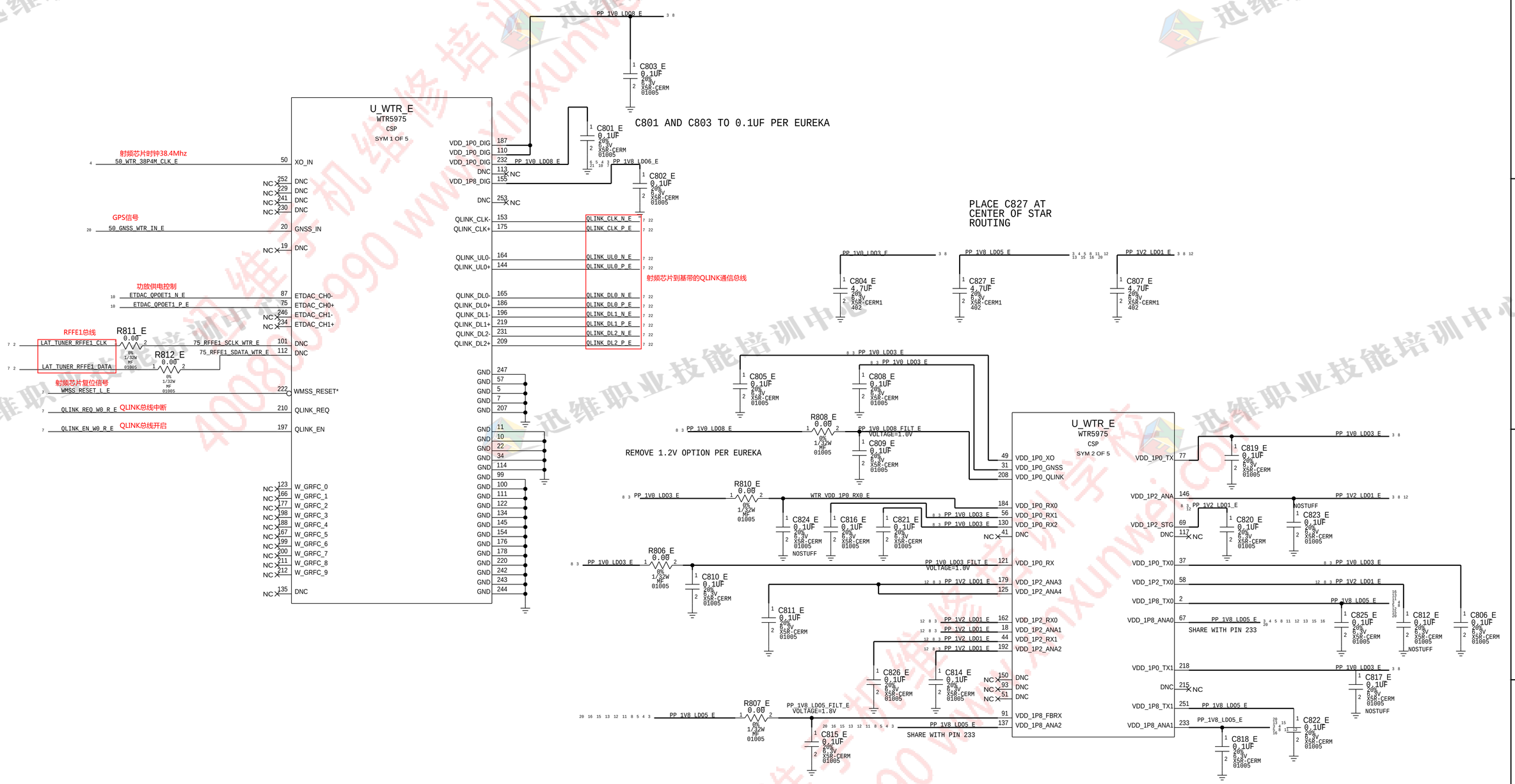

CONFIDENTIAL AND PROPRIETARY APPLE SYSTEM DESIGN. FOR REFERENCE ONLY - NOT A CHANGE REQUEST

www.xinxunwei.com 400-800-9990

TRANSCEIVER: TX & RX

CONFIDENTIAL AND PROPRIETARY APPLE SYSTEM DESIGN. FOR REFERENCE ONLY - NOT A CHANGE REQUEST

PART#	QTY	DESCRIPTION	REFERENCE DESIGNATOR(S)	CRITICAL	BOM OPTION
117S0161	1	01005 OR	R919_E	CRITICAL	ROW
117S0161	1	01005 OR	R922_E	CRITICAL	ROW

PART#	QTY	DESCRIPTION	REFERENCE DESIGNATOR(S)	CRITICAL	BOM OPTION
117S0161	1	01005 OR	R918_E	CRITICAL	JPN
117S0161	1	01005 OR	R920_E	CRITICAL	JPN

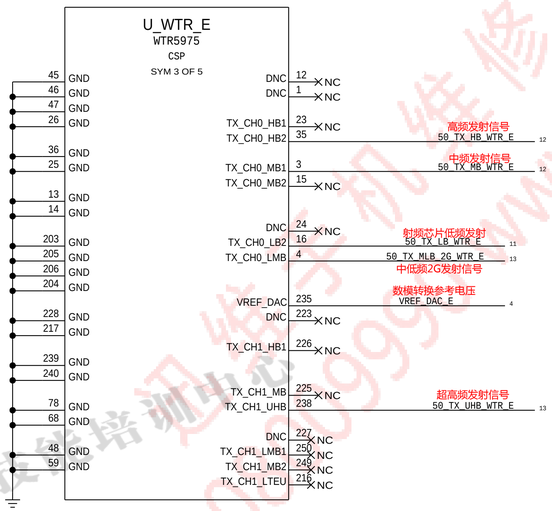

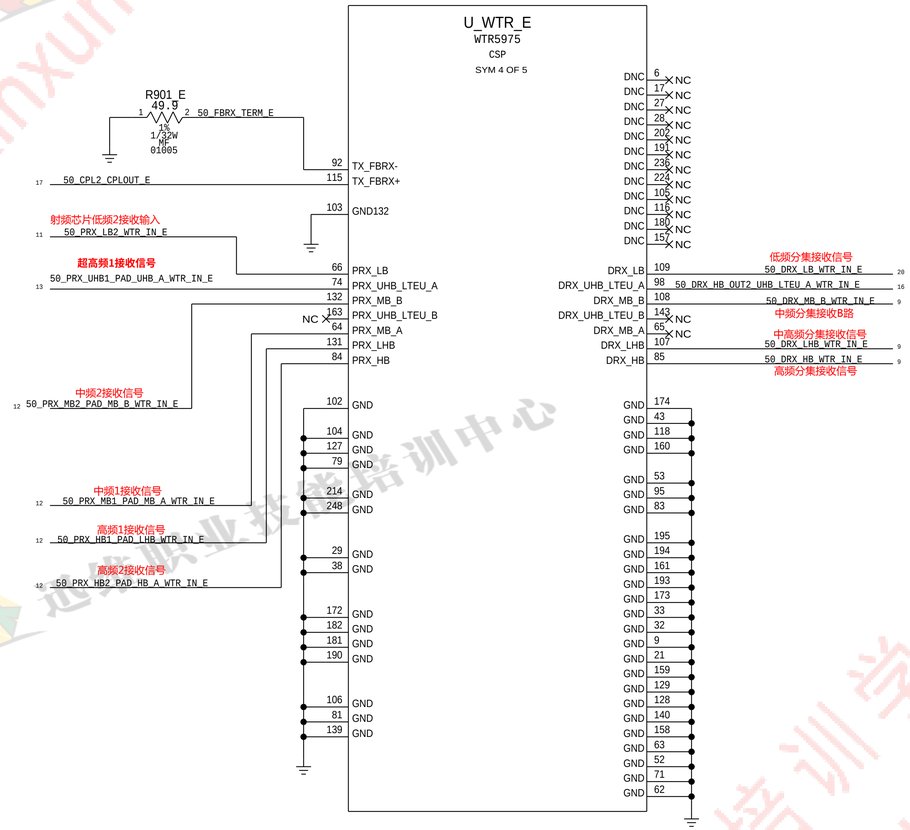

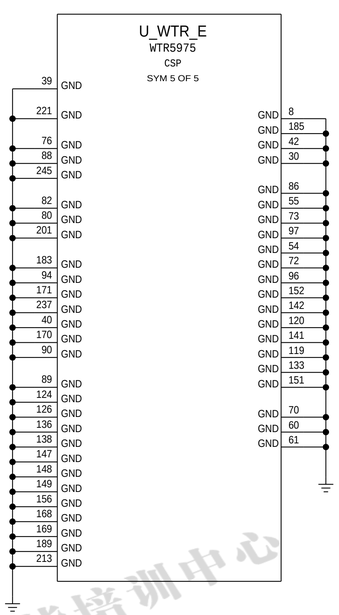

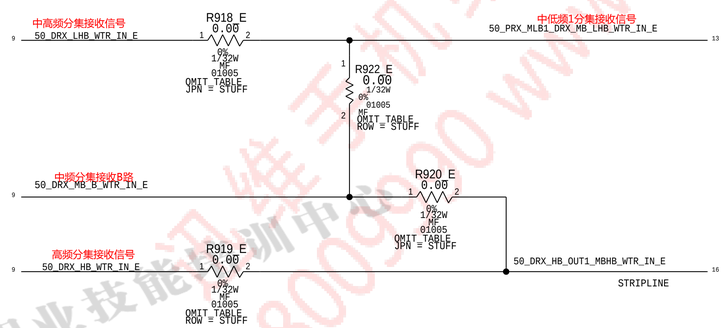

www.xinxunwei.com 400-800-9990

QET:MODULE

CONFIDENTIAL AND PROPRIETARY APPLE SYSTEM DESIGN. FOR REFERENCE ONLY - NOT A CHANGE REQUEST

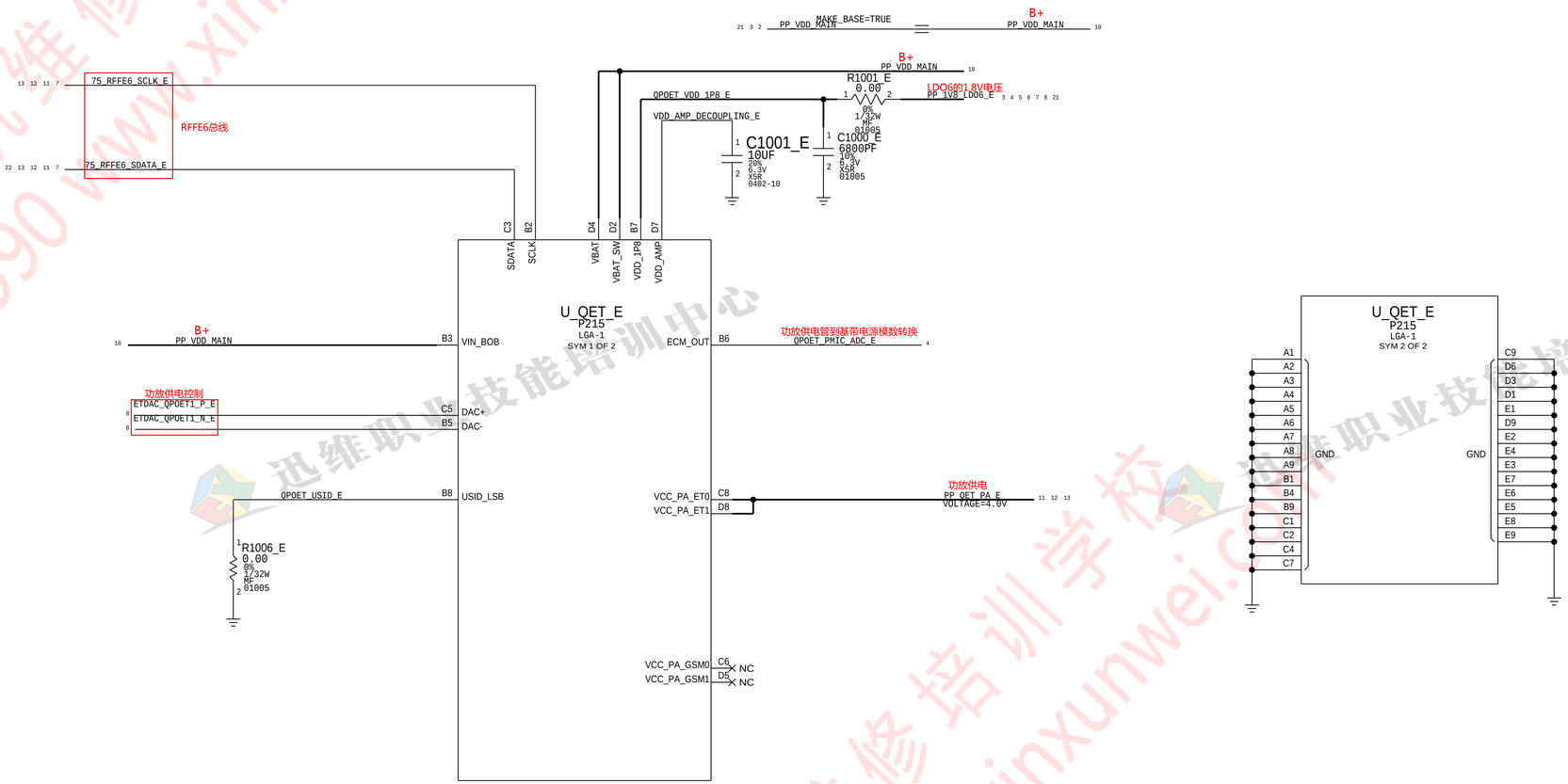

www.xinxunwei.com 400-800-9990

LB PAD

CONFIDENTIAL AND PROPRIETARY APPLE SYSTEM DESIGN. FOR REFERENCE ONLY - NOT A CHANGE REQUEST

PART#	QTY	DESCRIPTION	REFERENCE DESIGNATOR(S)	CRITICAL	BOM OPTION
118S0724	1	2G LB MATCH, 0 OHMS	R1108_E	CRITICAL	JPN
152S00021	1	6.8NH UHQ, LB ANT MATCH	R1104_E	CRITICAL	JPN
131S0555	1	1PF, LB ANT MATCH	L1101_E	CRITICAL	JPN
131S0176	1	2.4PF, 2G LB MATCH	L1102_E	CRITICAL	JPN

PART#	QTY	DESCRIPTION	REFERENCE DESIGNATOR(S)	CRITICAL	BOM OPTION
152S2006	1	6.2NH UHQ, LB ANT MATCH	R1104_E	CRITICAL	ROW

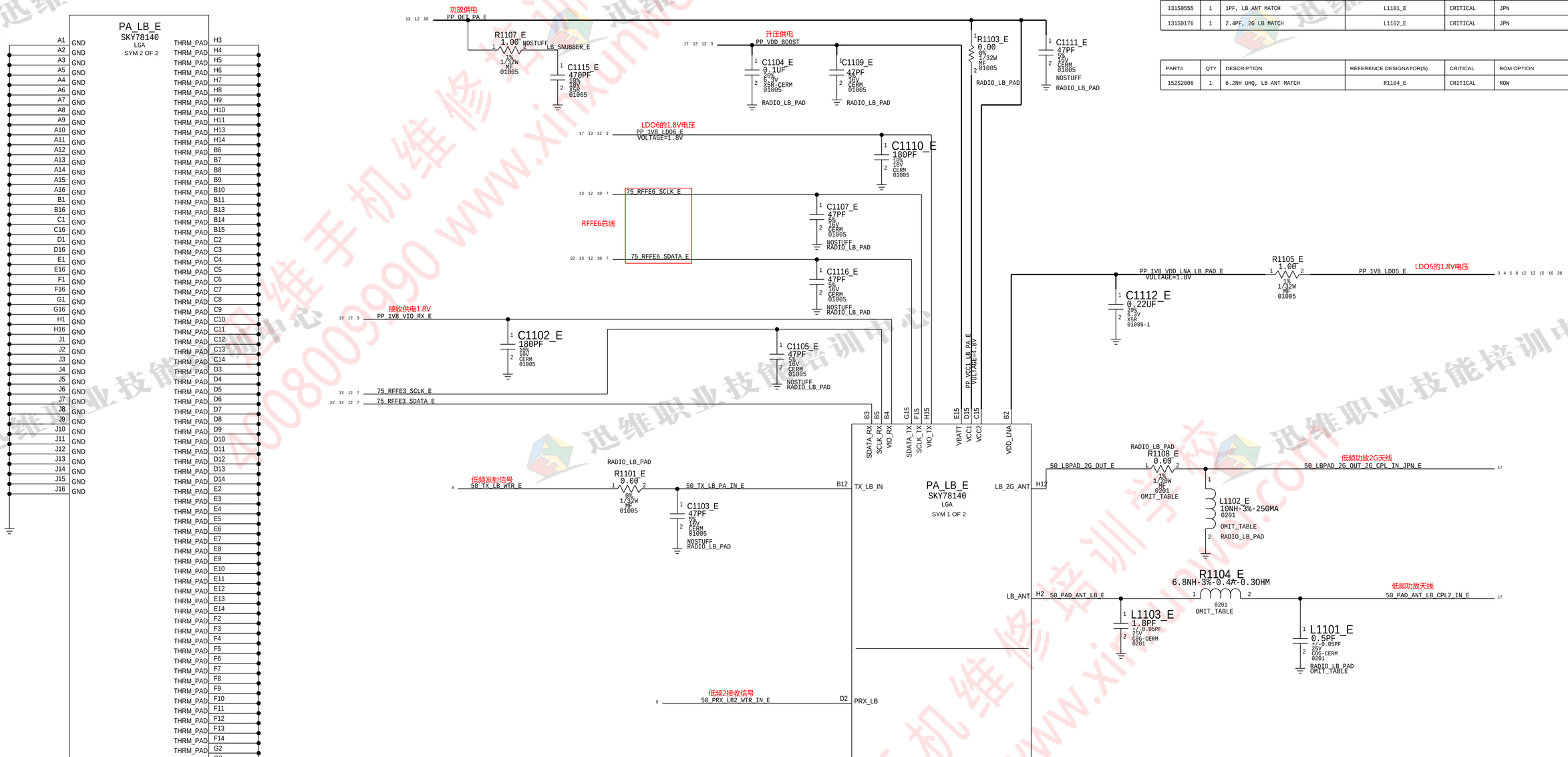

www.xinxunwei.com 400-800-9990

CONFIDENTIAL AND PROPRIETARY APPLE SYSTEM DESIGN. FOR REFERENCE ONLY - NOT A CHANGE REQUEST

HB PAD

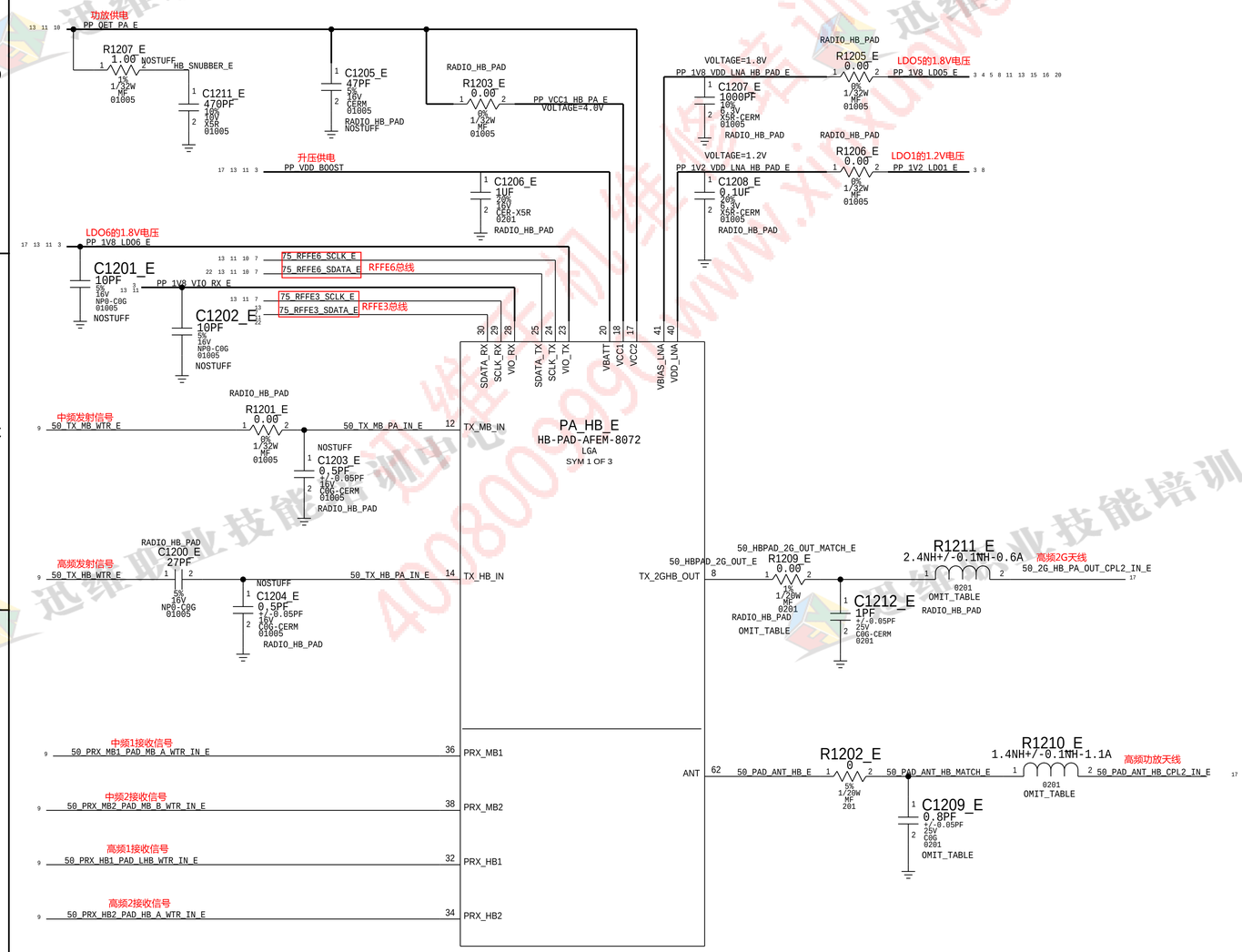

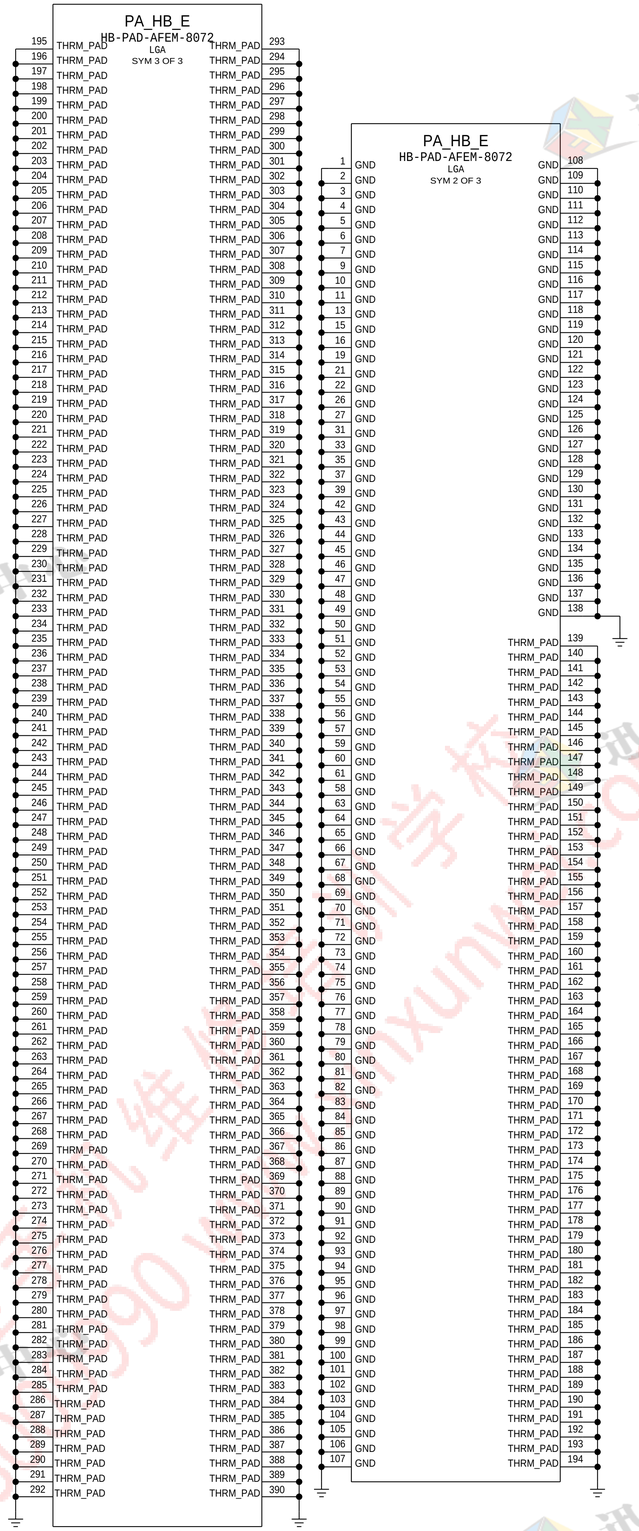

PART#	QTY	DESCRIPTION	REFERENCE DESIGNATOR(S)	CRITICAL	BOM OPTION
152S2023	1	3.2NH UHQ, 2G HB PAD MATCH	R1209_E	CRITICAL	JPN
152S00153	1	1NH UHQ, 2G HB PAD MATCH	R1211_E	CRITICAL	JPN
131S0425	1	0.5PF, HB ANT MATCH	C1209_E	CRITICAL	JPN
152S2042	1	1.8NH UHQ, HB ANT MATCH	R1210_E	CRITICAL	JPN

PART#	QTY	DESCRIPTION	REFERENCE DESIGNATOR(S)	CRITICAL	BOM OPTION
131S0329	1	0.4PF, HB ANT MATCH	C1209_E	CRITICAL	ROW
152S2000	1	2.0NH UHQ, HB ANT MATCH	R1210_E	CRITICAL	ROW

www.xinxunwei.com 400-800-9990

CONFIDENTIAL AND PROPRIETARY APPLE SYSTEM DESIGN. FOR REFERENCE ONLY - NOT A CHANGE REQUEST

UHB/2G PAD -JPN

PART#	QTY	DESCRIPTION	REFERENCE DESIGNATOR(S)	CRITICAL	BOM OPTION
353S01243	1	UHB PAD	PA_UHB_E	CRITICAL	JPN
117S0161	1	MLB/2GTX IN MCH2, 0 OHMS	R1302_E	CRITICAL	JPN
117S0161	1	UHB INPUT MCH1, 0 OHMS	R1303_E	CRITICAL	JPN
117S0002	1	MLB/2G MB OUT MCH1, 0 OHMS	R1305_E	CRITICAL	JPN
131S0552	1	2.7PF UHQ, UHB1 ANT MATCH	R1306_E	CRITICAL	JPN
117S0002	1	0 OHMS UHB2 OUT/DRX BP MCH1	R1307_E	CRITICAL	JPN
132S0316	1	UHB LNA DECOUPLING, 0.1UF	C1312_E	CRITICAL	JPN
117S0161	1	UHB LNA SUPPLY FILTER, 00HMS	R1300_E	CRITICAL	JPN
131S0214	1	VBAT DECOUPLING,18PF	C1311_E	CRITICAL	JPN
138S0692	1	VBAT DECOUPLING, 1UF	C1323_E	CRITICAL	JPN
117S0161	1	VCC2/VCC1 RESISTOR OPTION, 0 OHM	R1304_E	CRITICAL	JPN
152S1999	1	22NH, MLB1 ANT MATCH	C1318_E	CRITICAL	JPN
152S1688	1	3.5NH, UHB1 ANT MATCH	L1310_E	CRITICAL	JPN
131S0431	1	0.2PF, UHB TO METROCIRC	C1320_E	CRITICAL	JPN

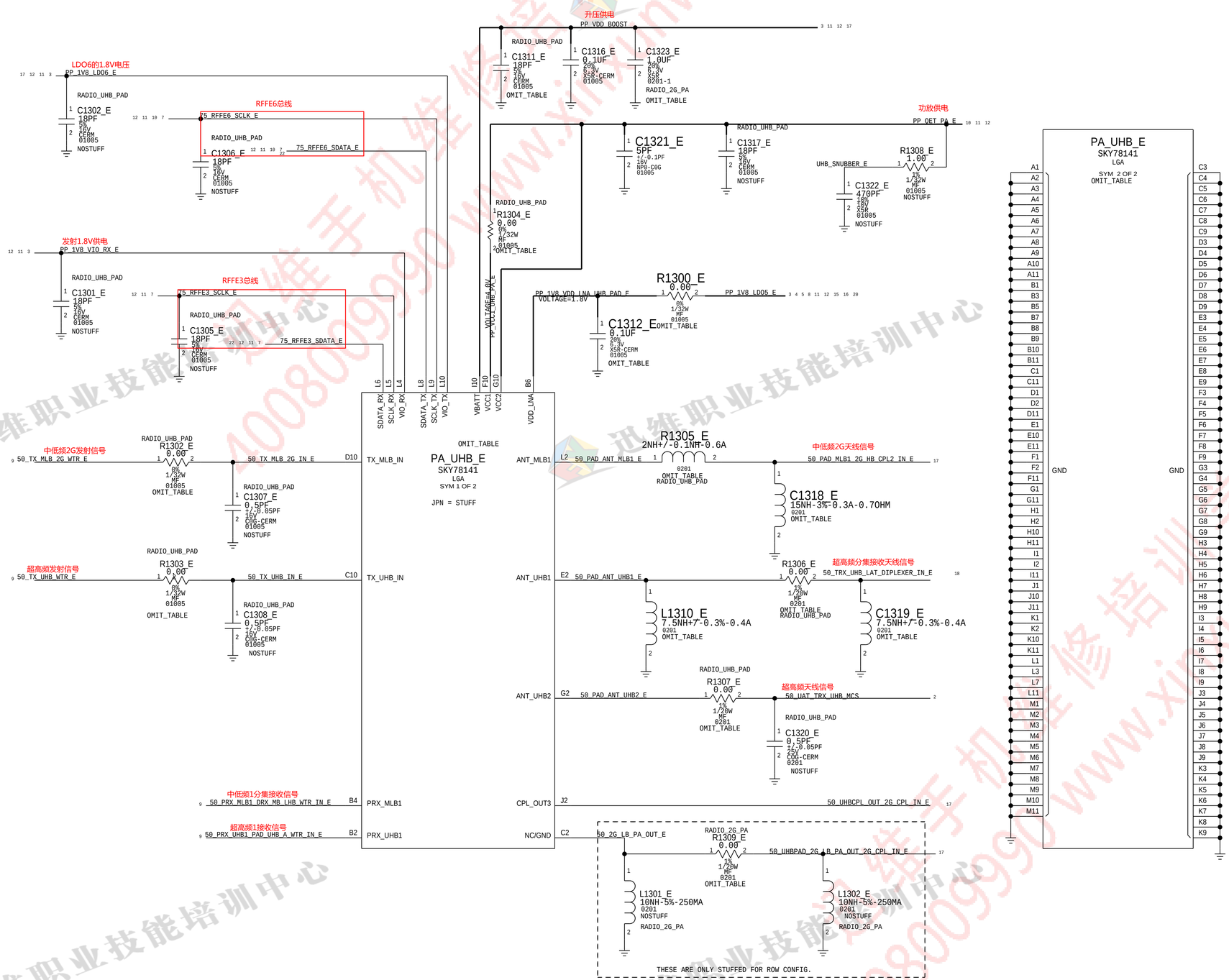

www.xinxunwei.com 400-800-9990

CONFIDENTIAL AND PROPRIETARY APPLE SYSTEM DESIGN. FOR REFERENCE ONLY - NOT A CHANGE REQUEST

2G PA - ROW

PART#	QTY	DESCRIPTION	REFERENCE DESIGNATOR(S)	CRITICAL	BOM OPTION
353S01247	1	2G PA	PA_UHB_E	CRITICAL	ROW
117S0161	1	MLB/2GTX IN MCH2, 0 OHMS	R1302_E	CRITICAL	ROW
117S0161	1	UHB INPUT MCH1, 0 OHMS	R1303_E	CRITICAL	ROW
118S0724	1	MLB/2G MB OUT MCH1, 0 OHMS	R1305_E	CRITICAL	ROW
118S0724	1	UHB2 OUT/DRX BP MCH1, 0 OHMS	R1307_E	CRITICAL	ROW
152S2053	1	4.7NH UHQ, 2G LB OUTPUT MCH2	R1309_E	CRITICAL	ROW
131S0214	1	VBAT DECOUPLING,18PF	C1311_E	CRITICAL	ROW
138S0692	1	VBAT DECOUPLING, 1UF	C1323_E	CRITICAL	ROW
117S0161	1	VCC2/VCC1 RESISTOR OPTION, 0 OHM	R1304_E	CRITICAL	ROW
103S00089	1	50 OHM TERMINATION FOR ROW ONLY	C1319_E	CRITICAL	ROW

www.xinxunwei.com 400-800-9990

CONFIDENTIAL AND PROPRIETARY APPLE SYSTEM DESIGN. FOR REFERENCE ONLY - NOT A CHANGE REQUEST

LB DSM

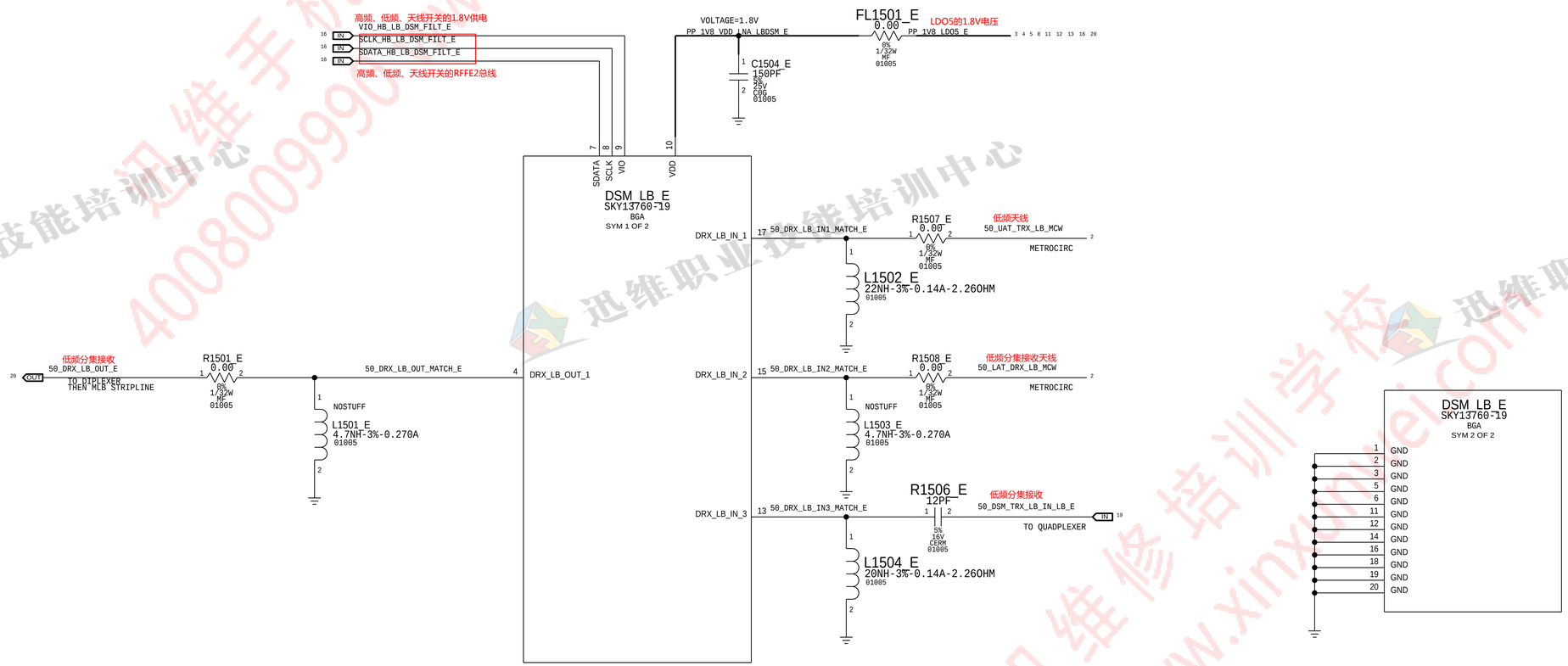

www.xinxunwei.com 400-800-9990

HB DSM

CONFIDENTIAL AND PROPRIETARY APPLE SYSTEM DESIGN. FOR REFERENCE ONLY - NOT A CHANGE REQUEST

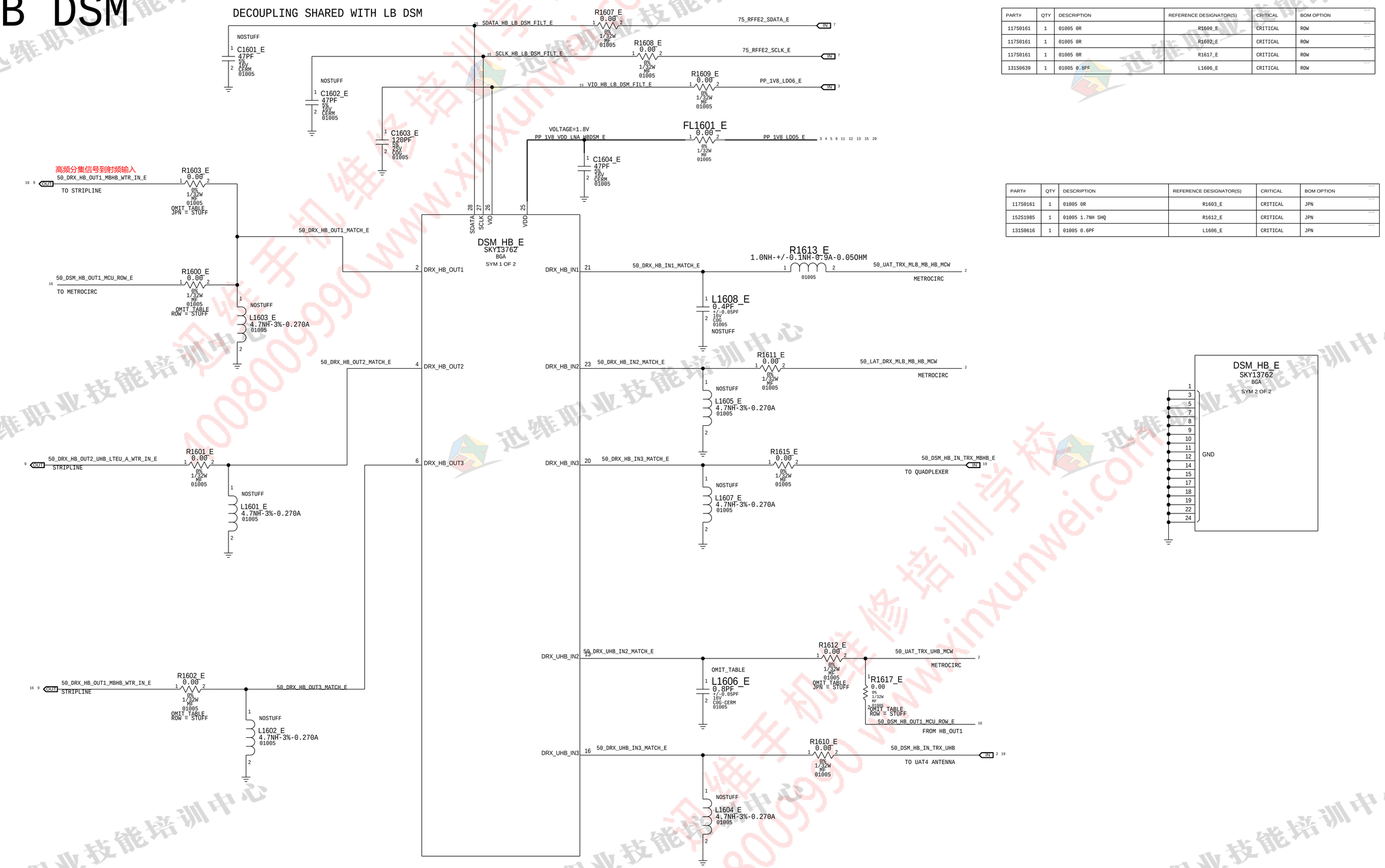

PART#	QTY	DESCRIPTION	REFERENCE DESIGNATOR(S)	CRITICAL	BOM OPTION
117S0161	1	01005 0R	R1600_E	CRITICAL	ROW
117S0161	1	01005 0R	R1602_E	CRITICAL	ROW
117S0161	1	01005 0R	R1617_E	CRITICAL	ROW
131S0639	1	01005 0.8PF	L1606_E	CRITICAL	ROW

PART#	QTY	DESCRIPTION	REFERENCE DESIGNATOR(S)	CRITICAL	BOM OPTION
117S0161	1	01005 0R	R1603_E	CRITICAL	JPN
152S1985	1	01005 1.7NH SHQ	R1612_E	CRITICAL	JPN
131S0616	1	01005 0.6PF	L1606_E	CRITICAL	JPN

www.xinxunwei.com 400-800-9990

COUPLER2

CONFIDENTIAL AND PROPRIETARY APPLE SYSTEM DESIGN. FOR REFERENCE ONLY - NOT A CHANGE REQUEST

PART#	QTY	DESCRIPTION	REFERENCE DESIGNATOR(S)	CRITICAL	BOM OPTION
118S0724	1	0201 0R	R1810_E	CRITICAL	ROW
131S00142	1	150PF, DC BLOCK FOR GSM	R1813_E	CRITICAL	ROW
118S0724	1	0201 0R	R1814_E	CRITICAL	ROW
131S00001	1	0.1PF, CPLR HB LAT MATCH	L1801_E	CRITICAL	ROW
152S2044	1	2.2NH, CPLR HB LAT MATCH	R1807_E	CRITICAL	ROW

PART#	QTY	DESCRIPTION	REFERENCE DESIGNATOR(S)	CRITICAL	BOM OPTION
118S0724	1	0201 0R	R1809_E	CRITICAL	JPN
152S2007	1	8.2NH 2G LB MATCH	R1812_E	CRITICAL	JPN
131S0431	1	0.2PF, CPLR HB LAT MATCH	L1801_E	CRITICAL	JPN
152S00055	1	2.6NH, CPLR HB LAT MATCH	R1807_E	CRITICAL	JPN
131S0249	1	2.2PF, 2G LB MATCH	C1810_E	CRITICAL	JPN

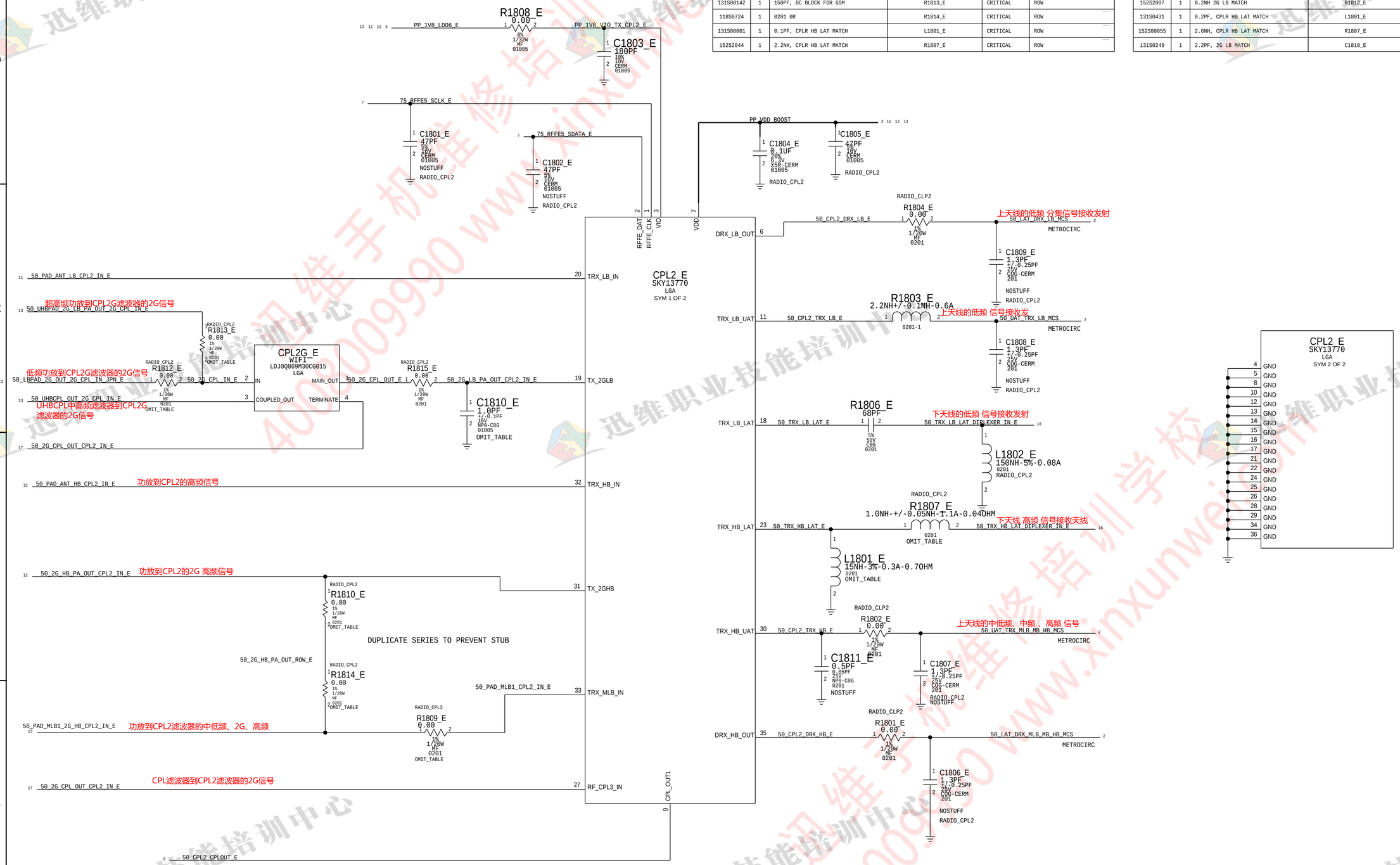

www.xinxunwei.com 400-800-9990

LOWER ANTENNA

CONFIDENTIAL AND PROPRIETARY APPLE SYSTEM DESIGN. FOR REFERENCE ONLY - NOT A CHANGE REQUEST

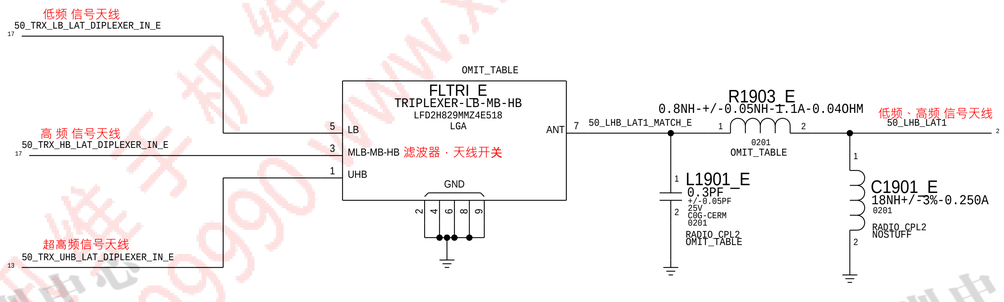

PART#	QTY	DESCRIPTION	REFERENCE DESIGNATOR(S)	CRITICAL	BOM OPTION
155S00298	1	TRIPLEXER, L+MLBMHB+UHB	FLTRI_E	CRITICAL	JPN
155S00297	1	DIPLEXER, L+MLBMHB	FLTRI_E	CRITICAL	ROW
152S00147	1	0.6NH UHQ, TRI ANT MATCH	R1903_E	CRITICAL	JPN
152S00151	1	0.8NH UHQ, TRI ANT MATCH	R1903_E	CRITICAL	ROW
131S00001	1	0.1PF, TRI ANT MATCH	L1901_E	CRITICAL	ROW

www.xinxunwei.com 400-800-9990

UAT & LB/UHB DIPLEXER

CONFIDENTIAL AND PROPRIETARY APPLE SYSTEM DESIGN. FOR REFERENCE ONLY - NOT A CHANGE REQUEST

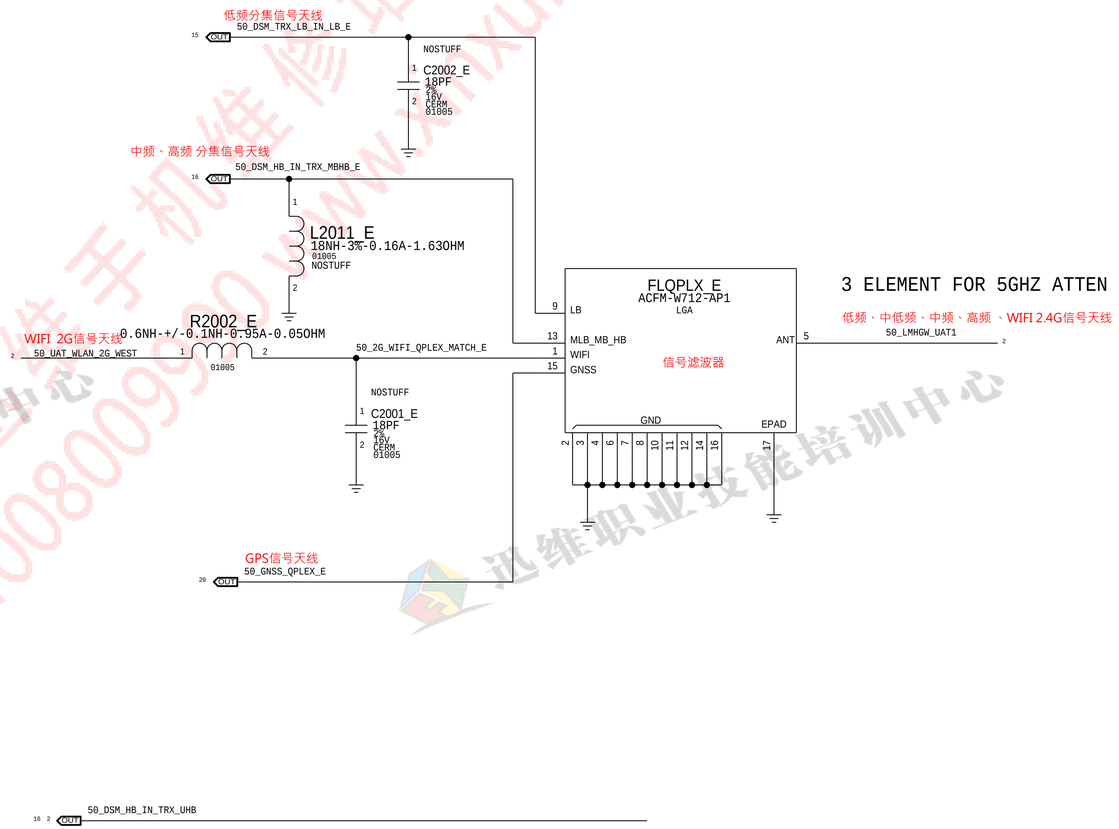

www.xinxunwei.com 400-800-9990

GPS & GPS/LB DIPLEXER

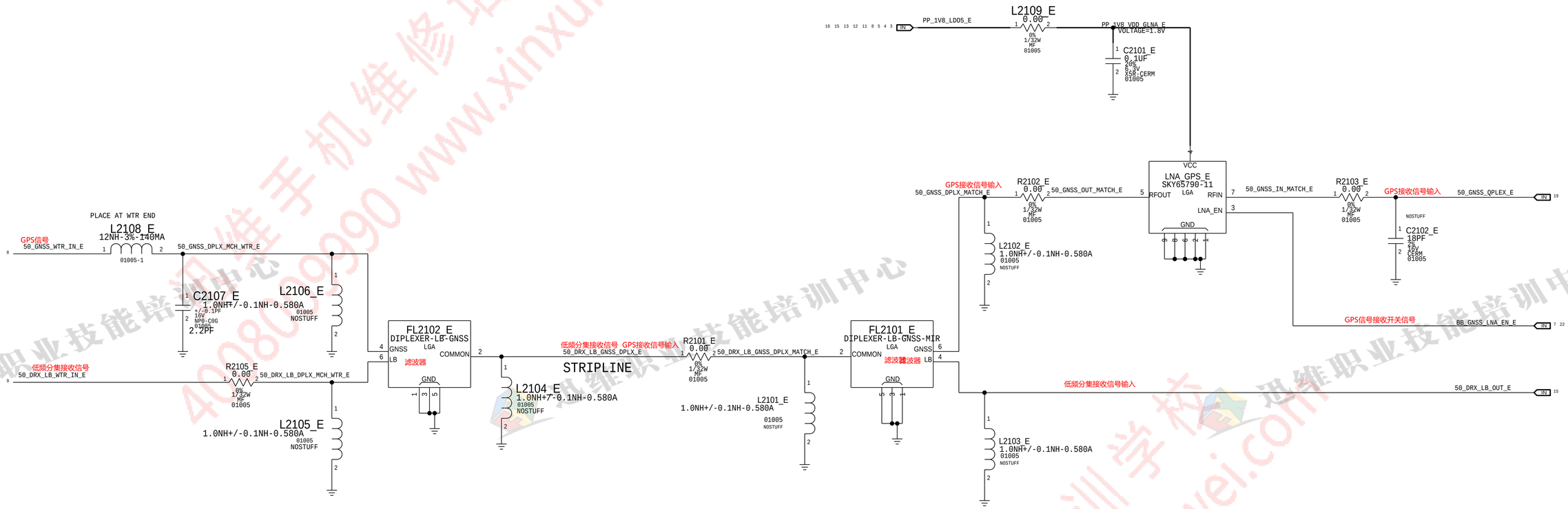

CONFIDENTIAL AND PROPRIETARY APPLE SYSTEM DESIGN. FOR REFERENCE ONLY - NOT A CHANGE REQUEST

www.xinxunwei.com 400-800-9990

SIM CARD: CONNECTOR

CONFIDENTIAL AND PROPRIETARY APPLE SYSTEM DESIGN. FOR REFERENCE ONLY - NOT A CHANGE REQUEST

PART NUMBER	ALTERNATE FOR PART NUMBER	BOM OPTION	REF DES	COMMENTS:
512S00026	512S00017	BOM_TABLE_ALTS	J204_E	SIMCRD,KYOCERA

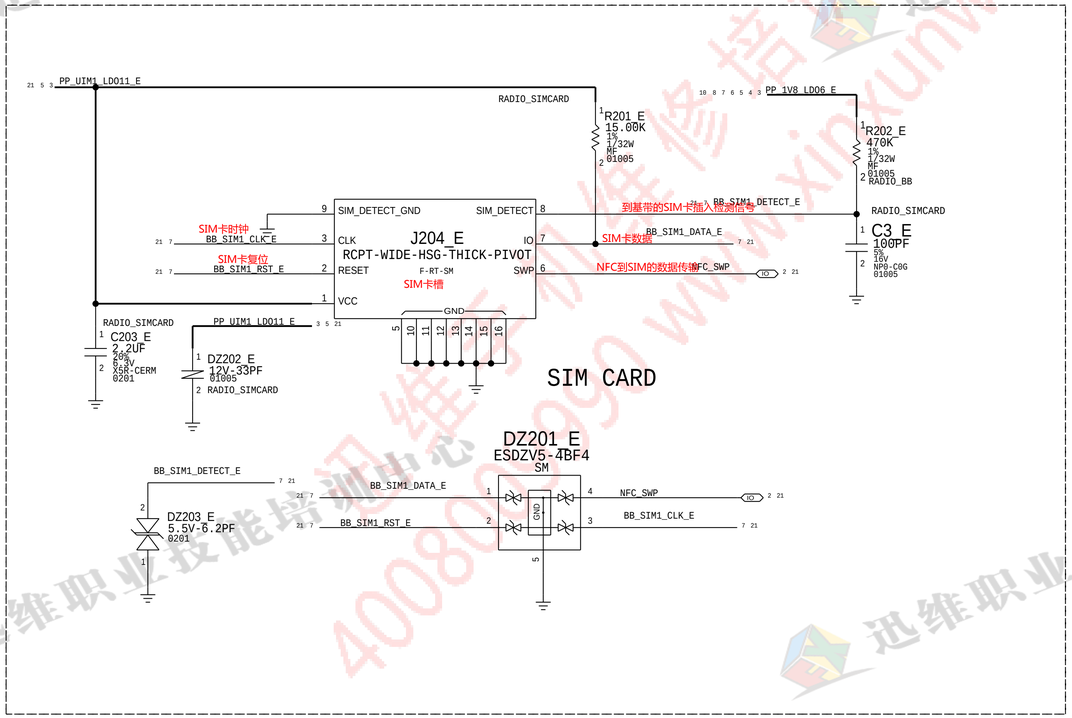

DEBUG CONNECTOR

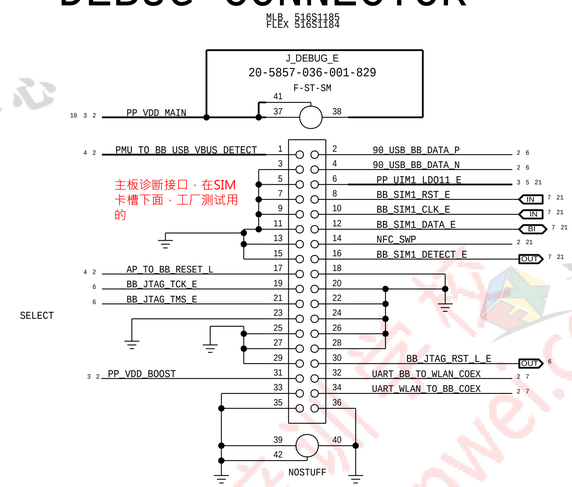

www.xinxunwei.com 400-800-9990

BB PROBE POINTS

PCIE

LAYOUT: VIA STUB AT BB PINS

PP1_E (P2MM-NSM) — 90_PCIE_AP_TO_BB_REFCLK_P 2 6

PP2_E (P2MM-NSM) — 90_PCIE_AP_TO_BB_REFCLK_N 2 6

PWR SEQ

PP18_E (P2MM-NSM) — PMIC_RESOUT_L_E 4 6

PP20_E (P2MM-NSM) — BB_TO_AP_RESET_DETECT_L 2 7

OTHERS

PP21_E (P2MM-NSM) — DISPLAY_TO_MANY_BSYNC 显示屏发出的同步信号 2 4

PP22_E (P2MM-NSM) — AP_TO_BB_COREDUMP 2 7

PP35_E (P2MM-NSM) — AP_TO_BB_MESA_ON 2 7

BASEBAND

CLK

PP33_E (P2MM-NSM) — BB_TO_NFC_CLK 基带给NFC时钟 2 4

PP34_E (P2MM-NSM) — 50_MDM_19P2M_CLK_E 4 6

PP36_E (P2MM-NSM) — XO_OUT_D0_EN_E 4 6

PP32_E (P2MM-NSM) — 50_SLEEP_CLK_32K_E 4 6

I2S

PP25_E (P2MM-NSM) — I2S_BB_TO_AP_LRCLK 2 7

PP26_E (P2MM-NSM) — I2S_BB_TO_AP_BCLK 2 7

PP27_E (P2MM-NSM) — I2S_AP_TO_BB_DOUT 2 7

PP28_E (P2MM-NSM) — I2S_BB_TO_AP_DIN 2 7

CTRL

PP23_E (P2MM-NSM) — BB_GNSS_LNA_EN_E 7 20

PP29_E (P2MM-NSM) — AP_TO_BB_TIME_MARK 2 7

PP30_E (P2MM-NSM) — BB_TO_STROBE_DRIVER_GSM_BURST_IND 2 7

UART

PP31_E (P2MM-NSM) — UART_BB_TO_AOP_RXD 2 7

PP24_E (P2MM-NSM) — UART_AOP_TO_BB_TXD 2 7

QLINK

LAYOUT: VIA STUB AT WTR PINS

PP53_E (P2MM-NSM) — QLINK_UL0_P_E 7 8

PP54_E (P2MM-NSM) — QLINK_UL0_N_E 7 8

PP55_E (P2MM-NSM) — QLINK_CLK_P_E 7 8

PP56_E (P2MM-NSM) — QLINK_CLK_N_E 7 8

LAYOUT: VIA STUB AT BB PINS

PP47_E (P2MM-NSM) — QLINK_DL0_P_E 7 8

PP48_E (P2MM-NSM) — QLINK_DL0_N_E 7 8

PP49_E (P2MM-NSM) — QLINK_DL1_P_E 7 8

PP50_E (P2MM-NSM) — QLINK_DL1_N_E 7 8

PP51_E (P2MM-NSM) — QLINK_DL2_P_E 7 8

PP52_E (P2MM-NSM) — QLINK_DL2_N_E 7 8

RFFE

PP40_E (P2MM-NSM) — 75_RFFE3_SDATA_E 7 11 12 13

PP41_E (P2MM-NSM) — 75_RFFE6_SDATA_E 7 10 11 12 13

SPMI

PP57_E (P2MM-NSM) — SPMI_CLK_E 4 6

PP58_E (P2MM-NSM) — SPMI_DATA_E 4 6

CONFIDENTIAL AND PROPRIETARY APPLE SYSTEM DESIGN. FOR REFERENCE PURPOSE ONLY - NOT A CHANGE REQUEST

www.xinxunwei.com 400-800-9990

1. ALL RESISTANCE VALUES ARE IN OHMS, 0.1 WATT +/- 5%.
2. ALL CAPACITANCE VALUES ARE IN MICROFARADS.
3. ALL CRYSTALS & OSCILLATOR VALUES ARE IN HERTZ.

REV	ECN	DESCRIPTION OF REVISION	CK APPD / DATE
10	0008927012	ENGINEERING RELEASED	2017-06-06

D21 RADIO_MLB_FF
5/22/2017

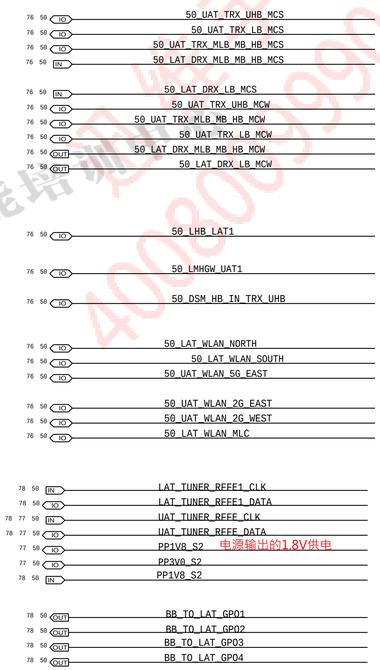

www.xinxunwei.com 400-800-9990

METROCIRC

NORTH-SOUTH METROCIRC
339S00297

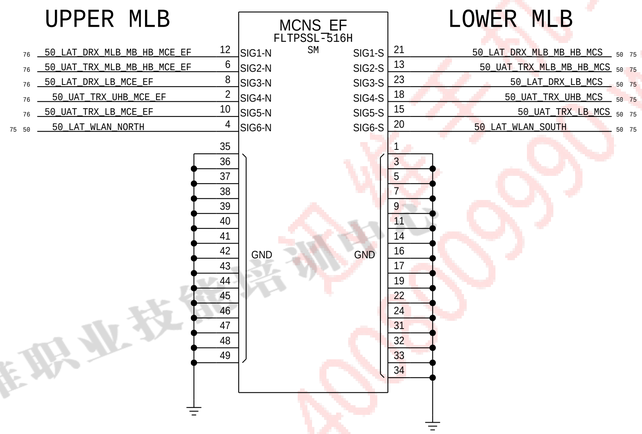

EAST-WEST METROCIRC
339S00296

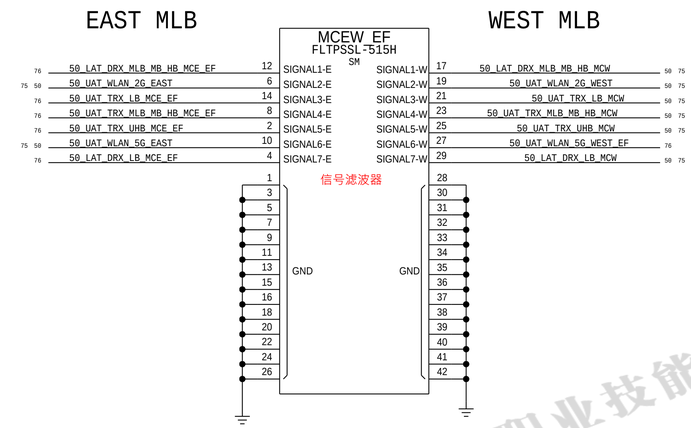

UHB/WIFI 5GHZ TEST

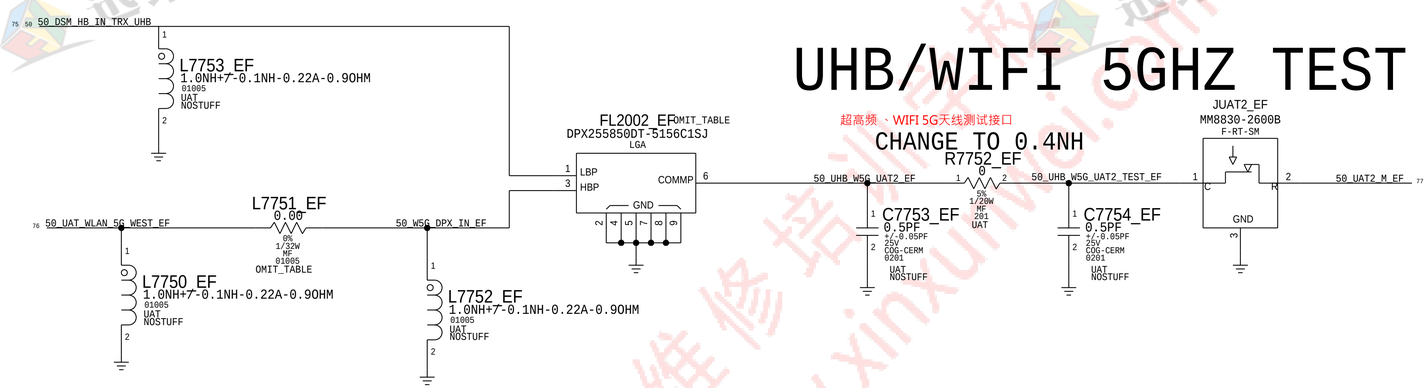

LAT MLC

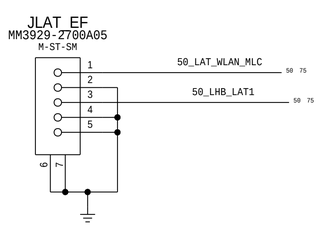

PART#	QTY	DESCRIPTION	REFERENCE DESIGNATOR(S)	CRITICAL	BOM OPTION
155S00274	1	B42/5G DIPLEXER	FL2002_EF	CRITICAL	JPN
155S00275	1	5G PASSTHROUGH	FL2002_EF	CRITICAL	ROW
131S0598	1	B42/5G DIPLEXER 5G_IN MATCH	L7751_EF	CRITICAL	JPN
131S0385	1	5G PASSTHROUGH INPUT MATCH	L7751_EF	CRITICAL	ROW

LB/MLB/MB/HB
WIFI 2.4GHZ TEST

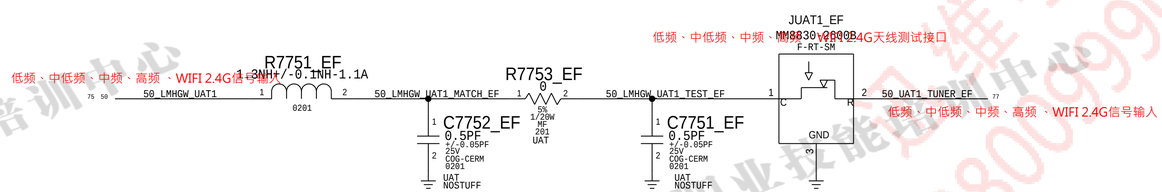

www.xinxunwei.com 400-800-9990

UAT TUNER FLEX

PLEASE CONTACT ANTENNA (MATT MOW)
FOR ANY COMPONENT CHANGE.

PART#	QTY	DESCRIPTION	REFERENCE DESIGNATOR(S)	CRITICAL	BOM OPTION
152S1240	1	4.3NH 03015 WW INDUCTOR	L8005_EF	CRITICAL	JPN
152S00749	1	3.6NH 03015 WW INDUCTOR	L8005_EF	CRITICAL	ROW

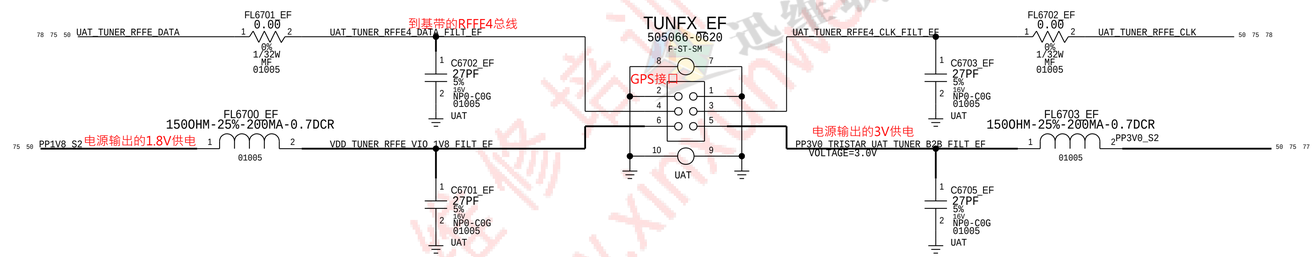

PINOUT IS ROTATED 180
COMPARED TO D20 & D201

UAT TUNER

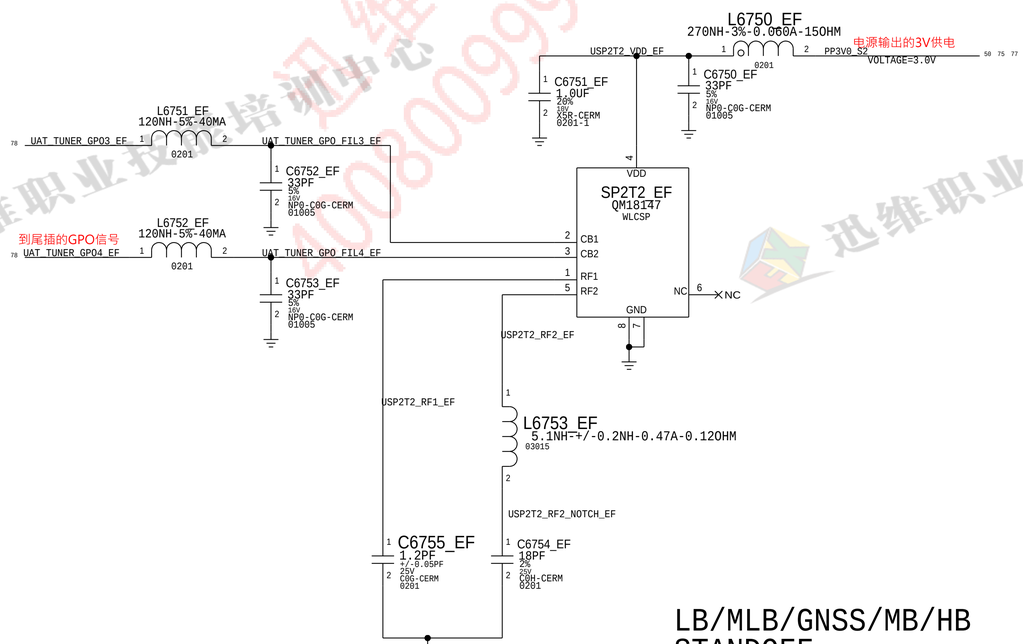

LB/MLB/GNSS/MB/HB
STANDOFF

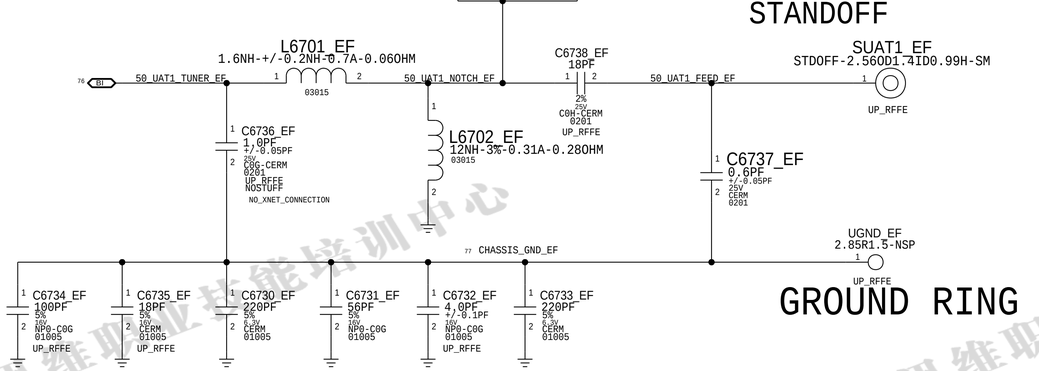

GROUND RING

ALT UAT1 GND

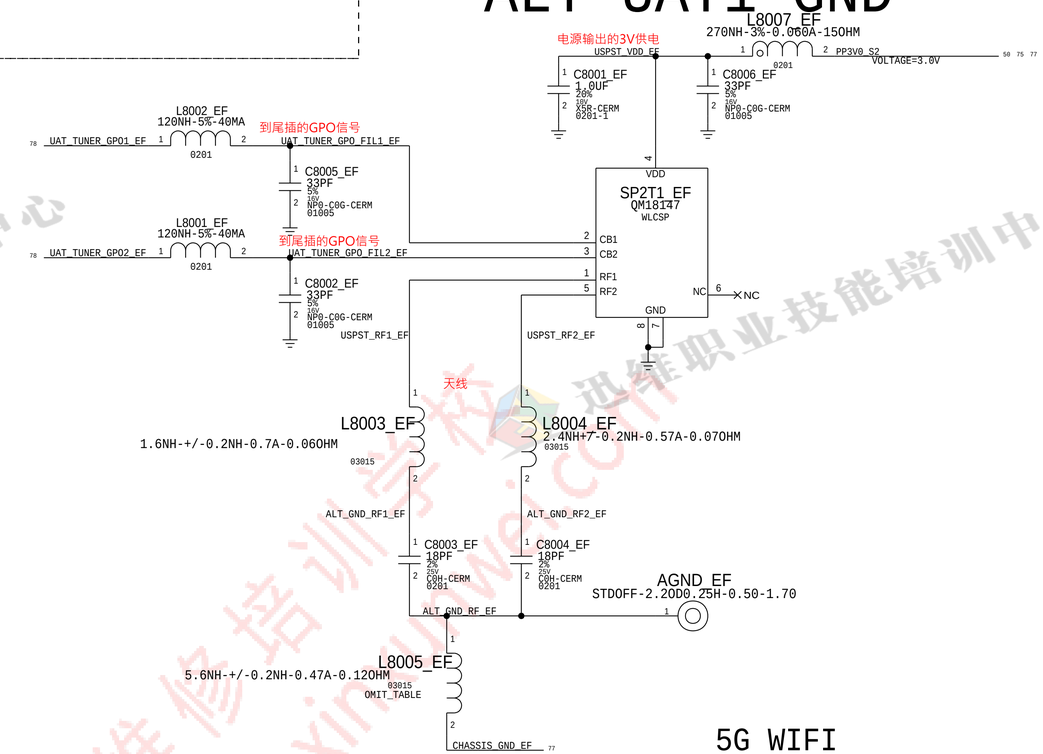

5G WIFI
STANDOFF

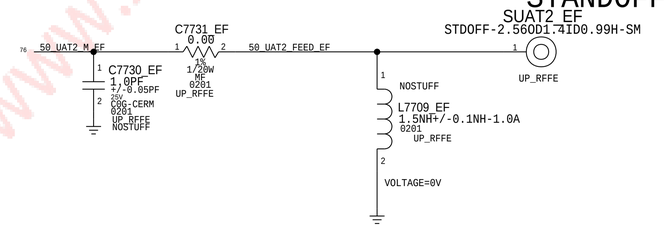

www.xinxunwei.com 400-800-9990

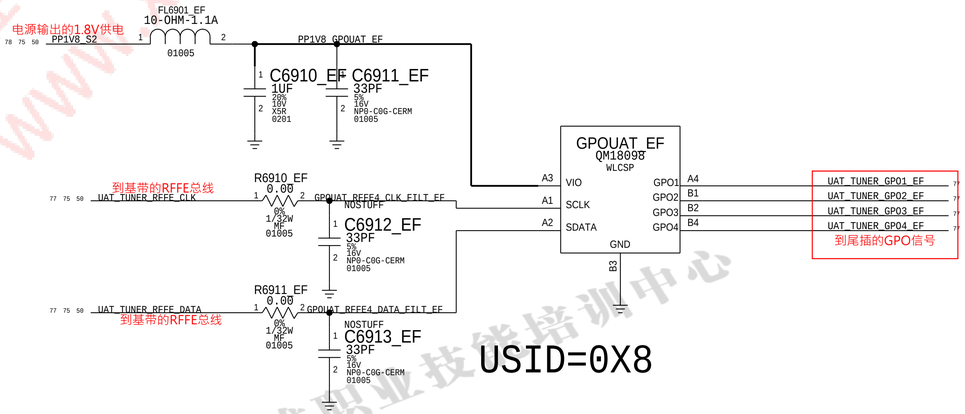

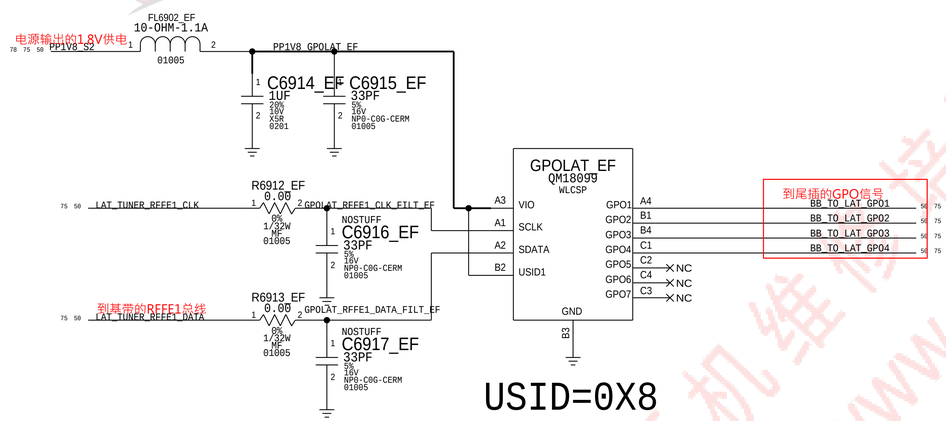

www.xinxunwei.com 400-800-9990

1. ALL RESISTANCE VALUES ARE IN OHMS, 0.1 WATT +/- 5%.
2. ALL CAPACITANCE VALUES ARE IN MICROFARADS.
3. ALL CRYSTALS & OSCILLATOR VALUES ARE IN HERTZ.

REV	ECN	DESCRIPTION OF REVISION	CK APPD / DATE
10	0008927012	ENGINEERING RELEASED	2017-06-06

D21X WIFI_MLB (GUINNESS)
NOV 28, 2016

PDF PAGE	CSA PAGE	CONTENTS
2	76	GUINNESS
3	77	WIFI FRONT-END

POWER
80 50 IN PP_VDD_MAIN
80 50 IN PP1V8_S2 电源输出的1.8V供电

CLOCKS
80 50 IN PMU_TO_WLAN_CLK32K 电源到WIFI的32K时钟信号
80 50 OUT WLAN_TO_AP_TIME_SYNC WIFI到CPU的时间同步信号

CONTROL
80 50 IN PMU_TO_WLAN_REG_ON
80 50 IN PMU_TO_BT_REG_ON
80 50 OUT BT_TO_PMU_HOST_WAKE
80 50 IN AP_TO_BT_WAKE

WLAN PCIE
80 50 IN 90_PCIE_AP_TO_WLAN_REFCLK_P
80 50 IN 90_PCIE_AP_TO_WLAN_REFCLK_N
80 50 IN 90_PCIE_AP_TO_WLAN_TXD_P
80 50 IN 90_PCIE_AP_TO_WLAN_TXD_N
80 50 OUT 90_PCIE_WLAN_TO_AP_RXD_P
80 50 OUT 90_PCIE_WLAN_TO_AP_RXD_N
80 50 IN PCIE_AP_TO_WLAN_RESET_L
80 50 IO PCIE_WLAN_BI_AP_CLKREQ_L
80 50 OUT WLAN_TO_PMU_HOST_WAKE WIFI到电源主机唤醒信号
80 50 IN AP_TO_WLAN_DEVICE_WAKE

WLAN UART
80 50 OUT UART_WLAN_TO_AP_RXD
80 50 IN UART_AP_TO_WLAN_TXD
80 50 OUT UART_WLAN_TO_AP_CTS_L
80 50 IN UART_AP_TO_WLAN_RTS_L

BLUETOOTH UART
80 50 IN UART_AP_TO_BT_TXD
80 50 OUT UART_BT_TO_AP_RXD
80 50 IN UART_AP_TO_BT_RTS_L
80 50 OUT UART_BT_TO_AP_CTS_L

AOP
80 50 IN AOP_TO_WLAN_CONTEXT_A CPU到WIFI调试总线数据输入
80 50 IN AOP_TO_WLAN_CONTEXT_B CPU到WIFI调试总线数据输入

COEX
80 50 IN UART_BB_TO_WLAN_COEX
80 50 OUT UART_WLAN_TO_BB_COEX

ANTENNA
81 50 IO 50_UAT_WLAN_2G_EAST
81 50 IO 50_UAT_WLAN_5G_EAST
81 50 IO 50_LAT_WLAN_NORTH
81 50 IO 50_LAT_WLAN_SOUTH
81 50 IO 50_LAT_WLAN_MLC

CONFIDENTIAL AND PROPRIETARY APPLE SYSTEM DESIGN. FOR REFERENCE PURPOSE ONLY - NOT A CHANGE REQUEST

www.xinxunwei.com 400-800-9990

WIFI/BT

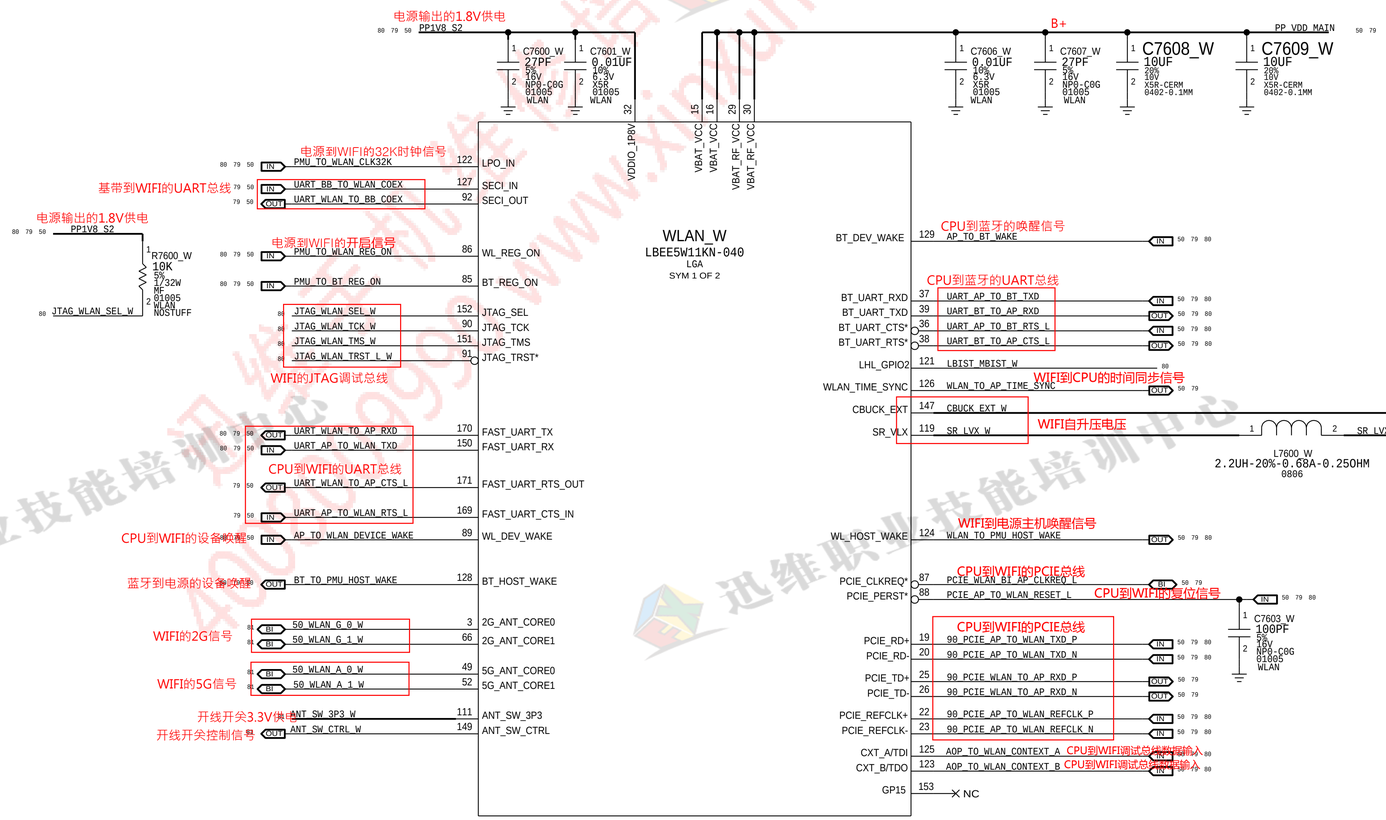

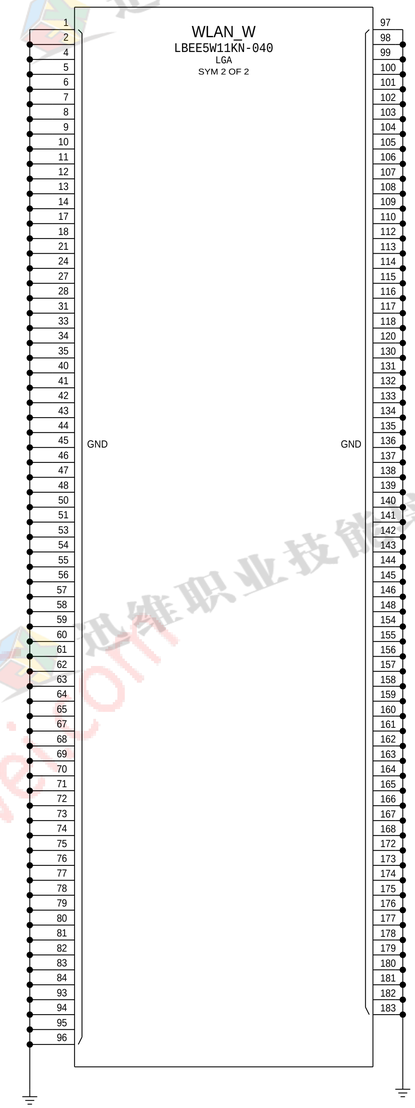

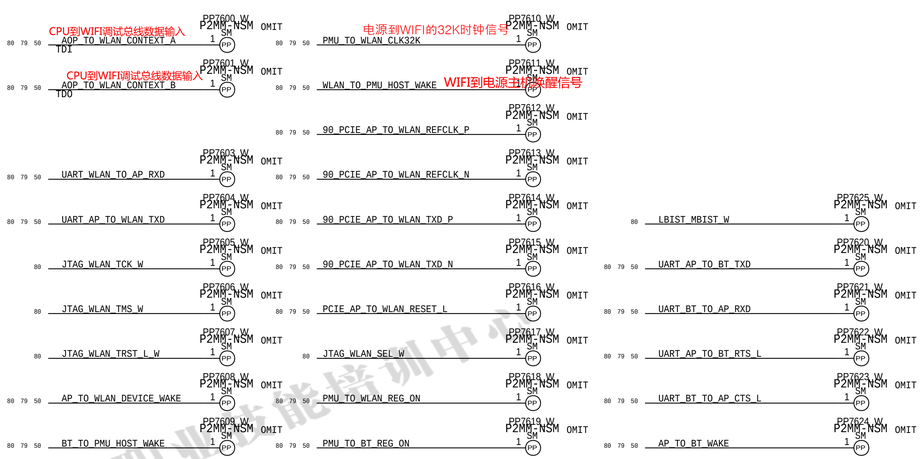

PART NUMBER	ALTERNATE FOR PART NUMBER	BOM OPTION	REF DES	COMMENTS:
339S00397	339S00399	BOM_TABLE_ALTS	WLAN_W	ALT WIFI/BT MODULE

迅维职业技能培训中心 400800990 www.xinxunwei.com
迅维手机维修培训学校

www.xinxunwei.com 400-800-9990

WIFI LOWER ANTENNA FEED

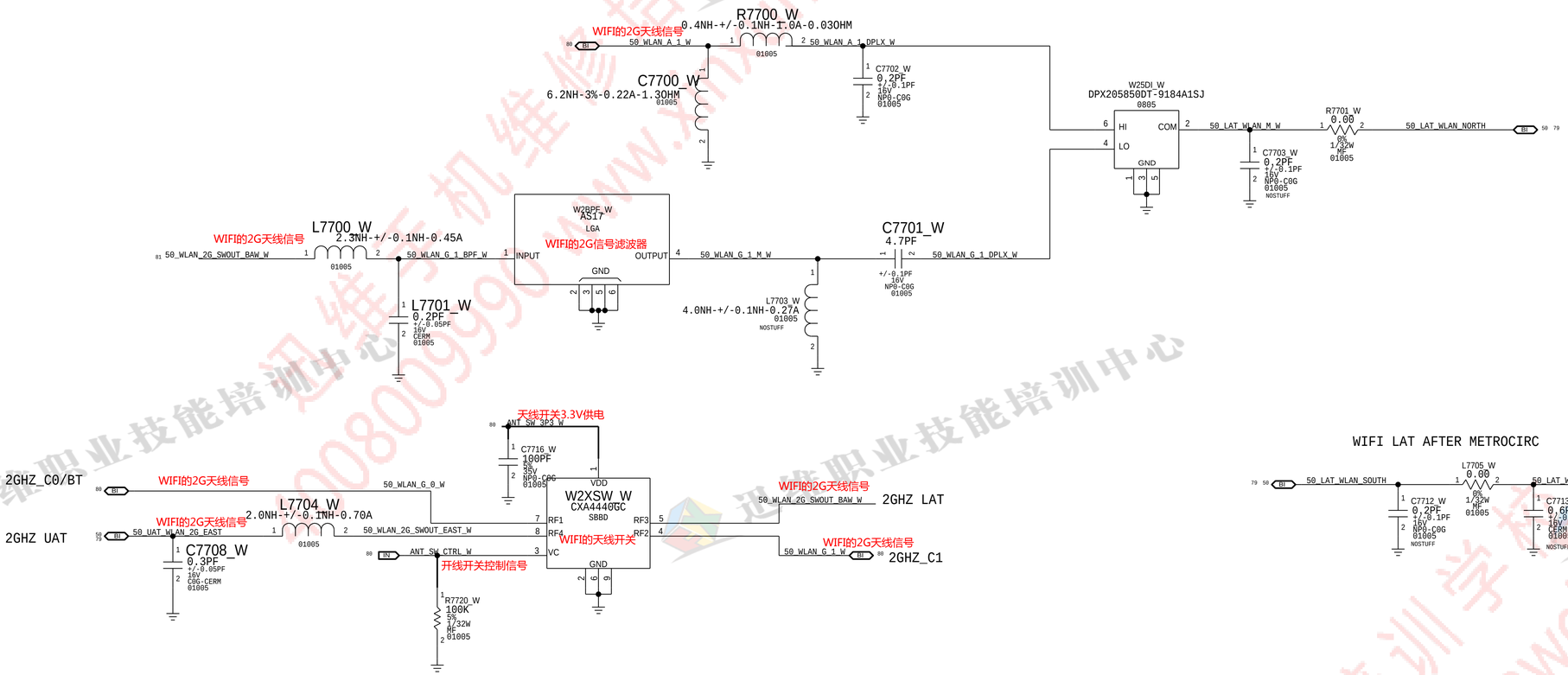

WIFI LAT AFTER METROCIRC

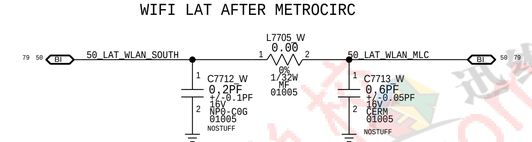

WIFI UPPER ANTENNA FEED

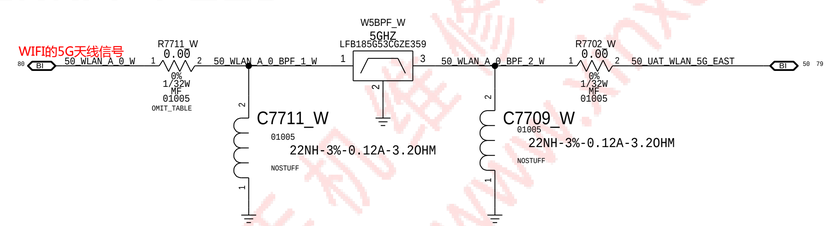

PART#	QTY	DESCRIPTION	REFERENCE DESIGNATOR(S)	CRITICAL	BOM OPTION
152S00498	1	5G CORE0 BPF MATCH	R7711_W	CRITICAL	D211
117S0161	1	5G CORE0 BPF MATCH	R7711_W	CRITICAL	JPN
117S0161	1	5G CORE0 BPF MATCH	R7711_W	CRITICAL	ROW